STRUCTURAL GENERAL NOTES

ABBREVIATIONS	
AB	ANCHOR BOLT
ABV	ABOVE
ADJ	ADJACENT
AFF	ABOVE FINISH FLOOR
AGGR	AGGREGATE
ALT	ALTERNATE
ALUM	ALUMINUM
APPROX	APPROXIMATELY
ARCH'L	ARCHITECTURAL
BD	BOARD
BLDG	BUILDING
BLK'G	BLOCKING
BM	BEAM
BN	BOUNDARY NAILING
BO	BOTTOM OF
BOTT	BOTTOM
BRG	BEARING
BTWN	BETWEEN
CAM	CAMBER
CANT'L	CANTILEVERED
CTR	CENTERED
CL	CENTERLINE
CLR	CLEAR
CMU	CONC MASONRY UNIT
COL	COLUMN
CONC	CONCRETE
CONN	CONNECTION
CONST	CONSTRUCTION
CONT	CONTINUOUS
d	PENNY
D/DIA	DIAMETER
DBL	DOUBLE
DEPT	DEPARTMENT
DFL	DOUGLAS FIR LARCH
DIAG	DIAGONAL
DTL	DETAIL
DIA	DIAMETER
DIM	DIMENSION
DN	DOWN
DWG	DRAWING
DWL	DOWEL
EA	EACH
EJ	EXPANSION JOINT
ELEV	ELEVATION
ELEC	ELECTRIC
EN	EDGE NAILING
ENCL	ENCLOSED
EOR	ENGINEER OF RECORD
EQ	EQUAL
EQUIP	EQUIPMENT
EXIST	EXISTING
EXP	EXPANSION
EXT	EXTERIOR
EXTD	EXTENDED
FD	FLOOR DRAIN
FND/FDN	FOUNDATION
FF	FINISH FLOOR
FG	FINISH GRADE
FIN	FINISH
FLR	FLOOR
FRMG	FRAMING
FT	FOOT OR FEET
FTG	FOOTING
FURR	FURRING
GA	GAUGE
GLB	GLU-LAM BEAM
GRND	GROUND
GT	GIRDER TRUSS
GYP	GYPSUM WALLBOARD
HDR	HEADER
HGR	HANGER
HGT HT	HEIGHT
HORIZ	HORIZONTAL
HTR	HIP TRUSS
INSUL	INSULATION
INT	INTERIOR
JT	JOINT
LAM	LAMINATE
LAT	LATERAL
LBS	POUNDS
LSL	LAM STRAND LUMBER
LT	LIGHT
LVL	LAM VENEER LUMBER
LW	LONG WAY
MAS	MASONRY
MAX	MAXIMUM
MECH	MECHANICAL
MFR	MANUFACTURER
MFR'D	MANUFACTURED
MIN	MINIMUM
MISC	MISCELLANEOUS
NO	NUMBER
N	COMMON NAIL
NTS	NOT TO SCALE
O/	OVER
OC	ON CENTER
OH	OPPOSITE HAND
OPN'G	OPENING
PFA	POST FROM ABOVE
PL	PLATE
PLYWD	PLYWOOD
PNL	PANEL
PREFAB	PREFABRICATED
PSL	PARALLEL STRAND LUMBER
PSI	LBS PER SQ INCH
PT	POST-TENSIONED
#	POUND
r/RAD	RADIUS
REF	REFERENCE
REINF	REINFORCING
REQ'D	REQUIRED
S	SINKER NAIL
SCHED	SCHEDULE
SF	SQUARE FEET
SECT	SECTION
SHTHG	SHEATHING
SIM	SIMILAR
SPEC	SPECIFICATIONS
SQ	SQUARE
STD	STANDARD
STG'D	STAGGERED
STL	STEEL
STRUCT	STRUCTURAL
SYM	SYMMETRICAL
SWL	SHEAR WALL
SPN	SOLE PLATE NAILING
SW	SHORT WAY
T&G	TONGUE AND GROOVE
T&B	TOP AND BOTTOM
THK	THICK
TO	TOP OF
TRIMM	TRIMMER
TR	TRUSS
TS	TUBE STEEL
TS LSL	TIMBERSTRAND BEAM
TYP	TYPICAL
UNO	UNLESS NOTED OTHERWIS
VERT	VERTICAL
W/ W/O	WITH WITHOUT
WS	WOOD SCREW
WT	WEIGHT

SIMPSON

GENERAL

1. ALL WORK SHALL CONFORM TO THE MINIMUM STANDARDS OF THE FOLLOWING CODE: THE INTERNATIONAL BUILDING AND RESIDENTIAL CODE, 2018 EDITION, OTHER REGULATING AGENCIES WHICH HAVE AUTHORITY OVER ANY PORTION OF THE WORK, AND THOSE CODES AND STANDARDS LISTED IN THESE NOTES AND SPECIFICATIONS.

2. THE STRUCTURAL DRAWINGS AND SPECIFICATIONS REPRESENT THE FINISHED STRUCTURE. THEY DO NOT INDICATE THE METHOD OF CONSTRUCTION. THE CONTRACTOR SHALL PROVIDE ALL MEASURES NECESSARY TO PROTECT THE STRUCTURE DURING CONSTRUCTION. SUCH MEASURES SHALL INCLUDE, BUT NOT BE LIMITED TO, BRACING, SHORING FOR LOADS DUE TO CONSTRUCTION EQUIPMENT, ETC. OBSERVATION VISITS TO THE SITE BY THE STRUCTURAL ENGINEER SHALL NOT INCLUDE INSPECTIONS OF THE ABOVE ITEMS.

3. THE CONTRACTOR SHALL VERIFY ALL DIMENSIONS PRIOR TO STARTING CONSTRUCTION. THE ARCHITECT SHALL BE NOTIFIED OF ANY DISCREPANCIES OR INCONSISTENCIES.

4. DIMENSIONS SHALL TAKE PRECEDENCE OVER THE SCALE SHOWN ON DRAWINGS.

5. NOTES AND DETAILS ON PLANS SHALL TAKE PRECEDENCE OVER GENERAL NOTES AND TYPICAL DETAILS.

6. SEE ARCHITECTURAL PLANS FOR THE FOLLOWING UNO:
   A. SIZE AND LOCATION OF ALL DOOR AND WINDOW OPENINGS.
   B. SIZE AND LOCATION OF ALL INTERIOR AND EXTERIOR NON-BEARING PARTITIONS.
   C. SIZE AND LOCATION OF ALL CONCRETE CURBS, FLOOR DRAINS, SLOPES, DEPRESSED AREAS, CHANGES IN LEVEL, CHAMFER, GROOVES, INSERTS, ETC.
   D. SIZE AND LOCATION OF FLOOR AND ROOF OPENINGS.
   E. FLOOR AND ROOF FINISHES.
   F. STAIR FRAMING AND DETAILS.
   G. DIMENSIONS NOT SHOWN ON STRUCTURAL PLANS.

7. SEE MECHANICAL, PLUMBING, AND ELECTRICAL PLANS FOR THE FOLLOWING:
   A. PIPE RUNS, SLEEVES, HANGERS, TRENCHES, WALL AND SLAB OPENINGS, ETC., (EXCEPT AS SHOWN OR NOTED).
   B. ELECTRICAL CONDUIT RUNS, BOXES, OUTLETS IN WALLS AND SLABS.
   C. CONCRETE INSERTS FOR ELECTRICAL, MECHANICAL, OR PLUMBING FIXTURES.
   D. SIZE AND LOCATION OF MACHINE EQUIPMENT BASES, OR ANCHOR BOLTS FOR MOUNTS.
   E. SIZE AND LOCATION OF ALL MECHANICAL UNITS.

8. OPENINGS, POCKETS, ETC. LARGER THAN 6 INCHES SHALL NOT BE PLACED IN SLABS, DECKS, BEAMS, JOISTS, COLUMNS, WALLS, ETC., UNLESS SPECIFICALLY DETAILED ON THE STRUCTURAL PLANS.

9. ASTM SPECIFICATIONS NOTED SHALL BE THE LATEST REVISION

10. THE CONTRACTOR SHALL INVESTIGATE THE SITE DURING CLEARING AND EARTHWORK OPERATIONS FOR FILLED EXCAVATIONS OR BURIED STRUCTURES SUCH AS CESSPOOLS, CISTERNS, FOUNDATIONS, ETC. IF ANY SUCH STRUCTURES ARE FOUND, THE ENGINEER OF RECORD SHALL BE NOTIFIED IMMEDIATELY.

11. CONSTRUCTION MATERIALS SHALL BE SPREAD OUT IF PLACED ON FLOORS OR ROOF. LOAD SHALL NOT EXCEED THE DESIGN LIVE LOAD PER SQUARE FOOT. PROVIDE ADEQUATE SHORING AND/OR BRACING WHERE STRUCTURE HAS NOT ATTAINED DESIGN STRENGTH.

12. WHERE THE LONGEST HORIZONTAL CEILING DIMENSION IS EQUAL TO OR GREATER THAN 20'-0", IT IS RECOMMENDED THAT RESILIENT CHANNEL BE USED TO HELP LIMIT DRYWALL CRACKING.

DESIGN CRITERIA

	LIVE LOAD	DEAD LOAD
FLOOR LOAD	40 PSF	15 PSF
ROOF LOAD	20 PSF	22 PSF
ROOF SNOW LOAD	≤ 10 PSF	22 PSF
STAIR & EXIT LOAD	----	----
STORAGE LOAD	----	----

* SEE FRAMING NOTES FOR SPECIAL LOADING CONDITIONS.

BASIC WIND SPEED	100 MPH (LRFD), 78 MPH (ASD)	
WIND RISK CATEGORY	II	
WIND EXPOSURE CATEGORY	C	
INTERNAL PRESSURE COEFFICIENT	± 0.18	
SEISMIC RISK CATEGORY & IMP0RTANCE	II	I_E = 1.0
MAPPED SPECTRAL RESPONSE ACCELERATIONS	S_S = 0.486 & S_1 = 0.163	
SPECTRAL RESPONSE COEFFICIENTS	S_{DS} = 0.421 & S_{D1} = 0.163	
SITE CLASS	C	
LATERAL FORCE RESISTING SYSTEM	LIGHT FRAME WALLS WITH SHEAR PANELS	R = 6.5
SEISMIC RESPONSE COEFFICIENT, C_S	0.065	
DESIGN BASE SHEAR	C_S x DEAD WEIGHT(W)	
ANALYSIS PROCEDURE	EQUIVALENT LATERAL FORCE	
SEISMIC DESIGN CATEGORY	C	

FOUNDATION

1. THIS IS TO CERTIFY THE FOUNDATION DEPICTED HEREIN HAS BEEN DESIGNED IN ACCORDANCE WITH RECOGNIZED ENGINEERING PRACTICE FOR CONDITIONS AS CLASSIFIED BY THE PROJECT GEOTECHNICAL REPORT:
   CONSULTANT: DUPONT ENGINEERING, INC
   PROJECT NO: 19-0437
   DATED: JUNE 30, 2019

2. FOOTINGS ARE DESIGNED BASED ON AN ALLOWABLE BEARING PRESSURE OF 2500 PSF PER SOIL REPORT.

3. SOILS PREPARATION AND FOUNDATION CONSTRUCTION SHALL CONFORM TO THE REQUIREMENTS OF THE GEOTECHNICAL REPORT.

4. SEE ARCHITECTURAL AND STRUCTURAL DRAWINGS FOR EXACT LOCATION OF BULKHEADS AND OPENINGS, ETC.

5. THE CONTRACTOR SHALL PROVIDE FOR PROPER DE-WATERING OF EXCAVATIONS FROM SURFACE WATER, GROUND WATER, SEEPAGE, ETC. (FOOTINGS SHALL NOT BE PLACED UNDER WATER).

6. FOOTINGS SHALL BE PLACED ACCORDING TO DEPTHS SHOWN ON THE STRUCTURAL PLANS. ALL ABANDONED FOOTINGS, UTILITIES, ETC. THAT INTERFERE WITH NEW CONSTRUCTION SHALL BE REMOVED.

7. CONCRETE PLACEMENT SHALL BE IN ONE CONTINUOUS OPERATION UNLESS OTHERWISE SPECIFIED AND SLAB SURFACE SHALL BE CURED WITH HUNTS COMPOUND OR EQUAL.

8. FOOTING BACKFILL AND UTILITY TRENCH BACKFILL WITHIN BUILDING AREA SHALL BE PER THE REQUIREMENTS OF THE GEOTECHNICAL REPORT. FLOODING WILL NOT BE PERMITTED.

9. STOOPS, PORCHES, OR OTHER ATTACHMENTS SHALL BE CAST INDEPENDENT OF THE CONCRETE FOUNDATION SLAB, UNO.

FOUNDATION HARDWARE

1. THICKEN SLAB AS REQUIRED FOR CONCRETE COVERAGE AT ANCHOR BOLTS PER ACI 318 WHERE OCCURS. THE CONCRETE CONTRACTOR SHALL VERIFY LOCATION OF ALL BOLTS, TIE-DOWNS, POST-ANCHORS, ETC. WITH THE ARCHITECTURAL PLANS PRIOR TO COMMENCING WORK AND BE RESPONSIBLE FOR SAME.

2. UNO BOLT SILL PLATES TO THE FOUNDATIONS WITH MIN 1/2" NOMINAL DIA ANCHOR BOLT WITH PLATE WASHERS. BOLTS SHALL BE SPACED NOT MORE THAN 72" O.C. THERE SHALL BE A MIN OF (2) BOLTS PER PIECE. ONE BOLT SHALL BE LOCATED NOT MORE THAN 12" AND NOT LESS THAN 4" FROM EACH END, OR FROM EACH SIDE OF A NOTCH GREATER THAN 1/2 THE WIDTH OF THE PLATE. EMBED BOLTS AT LEAST 7" INTO REINFORCED MASONRY OR CONCRETE. SILL PLATE ANCHOR BOLTS MAY BE "WET SET".

3. PROVIDE 3" X 3" X 0.229" PLATE WASHERS ON ALL ANCHOR BOLTS AT SHEAR WALLS. PLATE WASHERS SHALL EXTEND TO WITHIN 1/2" OF THE EDGE OF THE SILL PLATE ON THE SIDE(S) WITH SHEATHING. PROVIDE STANDARD CUT WASHERS UNDER BOLT HEADS AND NUTS WHEN SLOTTED PLATE WASHERS ARE USED. PROVIDE CUT OR SLOTTED WASHERS AGAINST WOOD AT ALL REMAINING WALLS.

4. ALL 1/2" DIA. ANCHOR BOLTS MAY BE REPLACED WITH:
   A. 1/2" DIA THREADED ROD EPOXY DOWELED TO FOUNDATION WITH SIMPSON SET-XP EPOXY (ICC REPORT ESR-2508) IN 5/8" DIA HOLE. PROVIDE A MIN. OF 4" EMBEDMENT AND 1 3/4" EDGE DISTANCE FROM ANY SLAB EDGE.
   B. 1/2" DIA SIMPSON TITEN HD HIGH STRENGTH THREADED ANCHOR (ICC ESR-2713). PROVIDE A MIN. OF 4" EMBEDMENT AND 1 3/4" EDGE DISTANCE FROM ANY SLAB EDGE.
   C. SIMPSON MASA/MASAP MUDSILL ANCHORS (ICC ESR-2555). INSTALLATION OF THE MUDSILL ANCHOR SHALL BE PER MANUFACTURER'S TYPICAL OR ALTERNATE INSTALLATION METHOD. DO NOT WET-SET THE MUDSILL ANCHOR, INSTALL WITH ONE LEG UP OR INSTALL OVER PLYWOOD OR OSB. FOLLOW ALL MANUFACTURER'S SPECIFICATIONS AND RECOMMENDATIONS DURING INSTALLATION. DO NOT US WHEN ANCHOR SPACING IS < 9 INCHES.

5. AT INTERIOR NON-BEARING AND NON-SHEARWALLS, 1/2" DIA ANCHOR BOLTS MAY BE REPLACED WITH MINIMUM 0.145" DIA X 2 7/8" POWDER DRIVEN FASTENERS AT A MAXIMUM SPACING OF 24" O.C. (HILTI ESR-2379 OR SIMPSON ESR-2138 OR EQUIVALENT)

6. PROVIDE REINFORCING BAR FOR HOLDOWNS PER DETAILS SHEET SD-1, UNO.

7. HOLDOWNS SPECIFIED ON PLANS MAY BE POST INSTALLED (RETRO-FITTED) AS NOTED BELOW. DRILL COMPLETELY THRU THE FOOTING AND PROVIDE THREADED ROD WITH BEARING PLATE, WASHER AND NUT. BACKFILL ALL AROUND THE ROD, WASHER AND NUT TO PROVIDE A MINIMUM OF 3" COVER USING LEAN CONCRETE MIX. THREADED ROD AND BEARING PLATE SHALL BE PER THE TABLE PROVIDED. SEE RETROFIT DETAIL SHEET SD-1. THE USE OF POST INSTALLED ANCHORS UNLESS NOTED OTHERWISE, E.G. EXPANSION ANCHORS OR EPOXY ANCHORS, IS NOT ALLOWED WITHOUT PRIOR REVIEW AND AUTHORIZATION BY THE ENGINEER OF RECORD. CONTACT THE ENGINEER OF RECORD FOR REQUEST OF ALTERNATE ANCHORAGE SOLUTIONS.

REINFORCING STEEL

1. REINFORCING BARS SHALL CONFORM TO THE REQUIREMENTS OF ASTM A-615 GRADE 60.

2. WELDED REINFORCING BARS SHALL CONFORM TO THE REQUIREMENTS OF ASTM A-706 GRADE 60.

3. ALL REINFORCING BAR BENDS SHALL BE MADE COLD.

4. WELDED WIRE REINFORCEMENT (WWR) SHALL BE PER ASTM A185 AND SHALL BE SUPPLIED IN SHEETS. WWR FRM ROLLS SHALL NOT BE USED.

5. MINIMUM LAP OF WELDED WIRE FABRIC SHALL BE 6 INCHES OR ONE AND ONE HALF SQUARES, WHICHEVER IS GREATER.

6. ALL BARS SHALL BE MARKED SO THEIR IDENTIFICATION CAN BE MADE WHEN THE FINAL IN-PLACE INSPECTION IS MADE.

7. REBAR SPLICES ARE TO BE CLASS "B" (UNO). MAINTAIN 2 BAR DIA CLEAR SPACE BETWEEN ADJACENT SPLICES.

8. REINFORCING SPLICES SHALL BE MADE ONLY WHERE INDICATED ON THE DRAWINGS.

9. DOWELS BETWEEN FOOTINGS AND WALLS OR COLUMNS SHALL BE THE SAME GRADE, SIZE AND SPACING OR NUMBER AS THE VERTICAL REINFORCING, RESPECTIVELY, UNO.

REBAR SIZE	3	4	5	6	7	8	9	10	11
MINIMUM LAP LENGTH (INCHES)	22	29	36	43	68	78	88	98	107
STD HOOK LENGTH (INCHES)	4 1/2	6	7 1/2	9	10 1/2	12	13 1/2	15 1/2	16 1/2

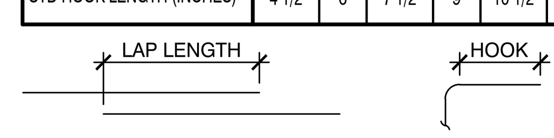

CONCRETE

1. ALL PHASES OF WORK PERTAINING TO THE CONCRETE CONSTRUCTION SHALL CONFORM TO THE "BUILDING CODE REQUIREMENTS FOR REINFORCED CONCRETE" (ACI 318 LATEST ADOPTED EDITION), WITH MODIFICATIONS AS NOTED IN THE DRAWINGS AND SPECIFICATIONS.

2. REINFORCED CONCRETE DESIGN IS BY THE "ULTIMATE STRENGTH DESIGN METHOD".
3. SCHEDULE OF STRUCTURAL CONCRETE 28-DAY STRENGTHS AND TYPES:

LOCATION IN STRUCTURE	STRENGTH	PSI TYPE
SLABS ON GRADE	2500 PSI	HARD ROCK
FOOTINGS	2500 PSI	HARD ROCK

DESIGN BASED ON 2500 PSI, 28-DAY STRENGTH, THEREFORE SPECIAL INSPECTION IS NOT REQUIRED.

4. CONCRETE MIX DESIGN SHALL BE SUBMITTED TO THE STRUCTURAL ENGINEER FOR APPROVAL WITH THE FOLLOWING REQUIREMENTS:
   A. COMPRESSIVE STRENGTH AT AGE 28 DAYS AS SPECIFIED ABOVE.
   B. LARGE AGGREGATE-HARDROCK: 3/4" MAXIMUM SIZE CONFORMING TO ASTM C-33.
   C. CEMENT: ASTM C-150, TYPE V PORTLAND CEMENT.
   D. MAXIMUM SLUMP: 5 INCHES.
   E. NO ADMIXTURES, EXCEPT FOR ENTRAINED AIR, AND AS APPROVED BY THE ENGINEER.
   F. WATER/CEMENT RATIO SHALL BE AS FOLLOWS:
      a. f'c = 4500 PSI.................w/c = 0.45
      b. f'c = 4000 PSI.................w/c = 0.5
      c. f'c < 4000 PSI.................w/c = PER MIX DESIGN
   G. FLY ASH: ASTM C618
   H. SLAG: ASTM C989
   I. SILICA FUME: ASTM C1240
   J. LIGHTWEIGHT AGGREGATE: ASTM C330
   K. AIR ENTRAINING ADMIXTURE: ASTMC260
   L. WATER REDUCERS: ASTM C494, TYPE A OR F

5. CONCRETE MIXING OPERATIONS, ETC, SHALL CONFORM TO ASTM C-94.

6. PLACEMENT OF CONCRETE SHALL CONFORM TO ACI STANDARD 614 AND PROJECT SPECIFICATIONS.

7. CLEAR COVERAGE OF CONCRETE OVER OUTER REINFORCING BARS SHALL BE AS FOLLOWS:
   A. CONCRETE POURED DIRECTLY AGAINST EARTH: 3 INCHES CLEAR
   B. STRUCTURAL SLABS: 3/4 INCHES CLEAR, TOP AND BOTTOM (2" TOP; 3/4" BOTTOM IN CORROSIVE ENVIRONMENTS)
   C. FORMED CONCRETE WITH EARTH BACKFILL: 2 INCHES CLEAR

8. ALL REINFORCING BARS, HOLD DOWN BOLTS AND STRAPS, AND OTHER CONCRETE INSERTS SHALL BE WELL SECURED IN POSITION PRIOR TO PLACING CONCRETE.

9. PROVIDE SLEEVES FOR PLUMBING AND ELECTRICAL OPENINGS IN CONCRETE BEFORE PLACING. DO NOT CUT ANY REINFORCING WHICH MAY CONFLICT. CORING IN CONCRETE IS NOT PERMITTED EXCEPT AS SHOWN. NOTIFY THE STRUCTURAL ENGINEER IN ADVANCE OF CONDITIONS NOT SHOWN ON THE DRAWINGS.

10. CONDUIT OR PIPE SIZE (O.D.) SHALL NOT EXCEED 30% OF SLAB THICKNESS AND SHALL BE PLACED BETWEEN THE TOP AND BOTTOM REINFORCING, UNLESS SPECIFICALLY DETAILED OTHERWISE. CONCENTRATIONS OF CONDUITS OR PIPES SHALL BE AVOIDED EXCEPT WHERE DETAILED OPENINGS ARE PROVIDED.

11. MODULUS OF ELASTICITY OF CONCRETE, WHEN TESTED IN ACCORDANCE WITH ASTM C-460, SHALL BE AT LEAST THE VALUE GIVEN BY THE EQUATIONS IN SECTION 8.5.1 OF ACI 318 FOR THE SPECIFIED 28-DAY STRENGTH.

12. SEE FOUNDATION DETAILS FOR REINFORCEMENT REQUIRED AT CORNERS AND INTERSECTIONS OF CONCRETE WALLS, CONVENTIONAL FOOTINGS AND GRADE BEAMS.

WOOD

1. FRAMING LUMBER, UNO:
   A. 2X AND 4X TO BE DOUGLAS FIR LARCH (DFL) NO. 2 GRADE. SEE FRAMING PLANS AND NOTES FOR WALL STUD REQUIREMENTS.
   B. 6X TO BE DOUGLAS FIR LARCH NO. 1 GRADE.
   C. ALL LUMBER SHALL HAVE A MOISTURE CONTENT OF LESS THAN 19%.

2. BOLT HOLES SHALL BE 1/16" (MAXIMUM) LARGER THAN THE BOLT SIZE. RE-TIGHTEN ALL NUTS PRIOR TO CLOSING IN.

3. ALL SILLS OR PLATES RESTING ON CONCRETE OR MASONRY SHALL BE PRESSURE TREATED DOUGLAS FIR USING BORON BASED PRESERVATIVES OR LSL TREATED WITH ZINC BORATE.

4. DO NOT NOTCH JOISTS, RAFTERS OR BEAMS, EXCEPT WHERE SHOWN IN DETAILS. OBTAIN ENGINEER'S APPROVAL FOR ANY HOLES OR NOTCHES NOT DETAILED. (i.e. ALL POSTS TO BE CONTINUOUS UNTIL FULLY SUPPORTED BY BEAM OR FOUNDATION BELOW.)

5. WHERE A POST OCCURS AT AN UPPER LEVEL, ADD THE SAME POST DIRECTLY BELOW IT ON THE LOWER LEVELS AND IN BETWEEN FLOOR SHEATHING AND LOWER LEVEL WALL TOP PLATES. ALL POSTS TO BE CONTINUOUS UNTIL FULLY SUPPORTED BY BEAM OR FOUNDATION BELOW.

6. FACE NAIL EACH PLY OF MULTIPLE 2X POSTS WITH 16D SINKERS AT 6" O.C.

7. PROVIDE MULTIPLE 2X POST AT ALL GIRDER TRUSS AND BEAM BEARING LOCATIONS, WIDTH TO MATCH BEAM OR TRUSS, MIN. (2) 2X UNO.

8. CONNECTION HARDWARE SHALL BE SIMPSON OR EQUAL AND MUST BE I.C.C. APPROVED.

9. FOR CONNECTIONS NOT DETAILED, PROVIDE FASTENERS PER TABLE 2304.9.1 OF THE LATEST ADOPTED EDITION OF THE INTERNATIONAL BUILDING CODE.

10. DO NOT NOTCH TOP PLATES OR STUDS EXCEPT AS SHOWN IN DETAILS. OBTAIN ENGINEER'S APPROVAL FOR ANY HOLES OR NOTCHES NOT DETAILED.

11. NON-BEARING WALLS SHALL HAVE STUDS SPACED AT 24" O.C. (MAX). REFER TO ARCHITECTURAL DRAWINGS FOR SIZE. TOP PLATES SHALL BE SUCH THAT A 1/2" GAP BETWEEN THE TOP OF THE PLATES AND THE BOTTOM OF THE TRUSSES AND/OR BLOCKING PANELS EXISTS AFTER THE ROOF IS LOADED.

12. TYPICAL FASTENER SIZE NOTED IN DRAWINGS:
    8d COMMON NAILS = 0.131" DIA X 2 1/2", 10d COMMON NAILS = 0.148" DIA
    16d COMMON NAILS = 0.162" DIA 16d SINKER NAILS = 0.148" DIA X3 1/4".

13. 16d SINKERS NOTED IN THESE DRAWINGS MAY BE REPLACED WITH 0.131 X 3 1/4" GUN NAILS PER THE FOLLOWING TABLES:

# OF 16d SINKERS	1	2	3	4	5	6	7	8	9	10	11	12
# OF 0.131 X 3 1/4" GUN NAILS	2	3	4	5	6	7	8	9	11	12	13	14

SPACING OF 16d SINKERS	2" OC	4" OC	6" OC	8" OC	10" OC	12" OC
SPACING OF 0.131 X 3 1/4" GUN NAILS	1 1/2" OC	3 1/2" OC	5" OC	7" OC	8 1/2" OC	10 1/2" OC

MANUFACTURED BEAMS

1. GLUE LAMINATED BEAMS (GLB)
   A. GLB SHALL BE 24F-V4, (CONTINUOUS AND CANTILEVERED GLB SHALL BE 24F-V8) AND HAVE THE FOLLOWING MINIMUM PROPERTIES: FB=2400 PSI, FV=240 PSI
      FC (PERPENDICULAR) = 650 PSI
      E=1,800,000 PSI
   B. ALL BEAMS SHALL BE FABRICATED USING EXTERIOR GLUE. FABRICATION AND HANDLING PER LATEST AITC AND WCCA STANDARDS. BEAMS TO BEAR GRADE STAMP AND AITC STAMP AND CERTIFICATE.
   C. MOISTURE CONTENT SHALL BE LIMITED TO A MAXIMUM OF 12%.
   D. ALL GLB SHALL HAVE STANDARD CAMBER, UNO. ON PLANS.

2. LAMINATED STRAND LUMBER (1.3E OR 1.5E LSL)
   A. LSL BEAMS SHALL HAVE I.C.C APPROVAL AND HAVE THE FOLLOWING MINIMUM PROPERTIES:
      1) LSL (1.3E) - E = 1,300,000 PSI, FB = 1700 PSI, FV = 400 PSI
         FC (PERPENDICULAR) = 680 PSI, FC (PARALLEL) = 1400 PSI
      2) LSL (1.5E) - E = 1,500,000 PSI, FB = 2250 PSI, FV = 400 PSI
         FC (PERPENDICULAR) = 750 PSI, FC (PARALLEL) = 1950 PSI
   B. ALL MULTI-PLY LSL MEMBERS SPECIFIED ON PLANS MAY BE REPLACED WITH SOLID MEMBERS OF EQUAL OR GREATER PROPERTIES WITH EQUAL OR GREATER WIDTH AND DEPTH WITHOUT FURTHER REVIEW.

3. LAMINATED VENEER LUMBER (LVL)
   A. LVL BEAMS SHALL HAVE I.C.C APPROVAL AND HAVE THE FOLLOWING MINIMUM PROPERTIES:
      1) LVL (1.7E) - E = 1,700,000 PSI, FB = 2650 PSI, FV = 285 PSI,
         FC (PERPENDICULAR) = 750 PSI, FC (PARALLEL) = 3000 PSI
      2) LVL (1.9E) - E = 1,900,000 PSI, FB = 2600 PSI, FV = 285 PSI,
         FC (PERPENDICULAR) = 750 PSI, FC (PARALLEL) = 2510 PSI
      3) LVL (2.0E) - E = 2,000,000 PSI, FB = 2800 PSI, FV = 285 PSI,
         FC (PERPENDICULAR) = 750 PSI, FC (PARALLEL) = 3000 PSI
   B. MULTIPLE-PLY LVL BEAMS SHALL BE NAILED TOGETHER AS FOLLOWS:
      1) PROVIDE (2) ROWS OF 16D SINKERS AT 12" O.C.
         FOR BEAMS ≤ 11 7/8" DEEP.
      2) PROVIDE (3) ROWS OF 16D SINKERS AT 12" O.C.
         FOR BEAMS > 11 7/8" DEEP.
   C. ALL MULTI-PLY LVL MEMBERS SPECIFIED ON PLANS MAY BE REPLACED WITH SOLID MEMBERS OF EQUAL OR GREATER PROPERTIES WITH EQUAL OR GREATER WIDTH AND DEPTH WITHOUT FURTHER REVIEW.

4. PARALLEL STRAND LUMBER (PSL)
   A. PSL BEAMS SHALL HAVE I.C.C APPROVAL AND HAVE THE FOLLOWING MINIMUM PROPERTIES:
      E = 2,000,000 PSI, FB = 2900 PSI, FV = 290 PSI
      FC (PERPENDICULAR) = 750 PSI, FC (PARALLEL) = 2900 PSI

PREFABRICATED WOOD TRUSSES

1. PREFABRICATED WOOD ROOF TRUSSES SHALL BE AS DESIGNED BY THE TRUSS MANUFACTURER (INCLUDING BRIDGING SIZE AND SPACING) UNO. THE CONTRACTOR SHALL SUBMIT SHOP DRAWINGS, ERECTION DRAWINGS, AND DESIGN CALCULATIONS, SEALED BY AN ENGINEER, REGISTERED IN THE STATE OF THE GOVERNING JURISDICTION, FOR REVIEW PRIOR TO MANUFACTURE. CALCULATIONS AND SHOP DRAWINGS SHALL SHOW ANY SPECIAL DETAILS REQUIRED AT BEARING POINTS. ALL CONNECTORS SHALL HAVE CURRENT I.C.C. APPROVAL.

2. TRUSS MANUFACTURER TO DESIGN TRUSSES FOR LATERAL LOAD (LAT. = XXXX) IN POUNDS, AS SHOWN ON PLANS.

3. UNLESS OTHERWISE NOTED, TRUSSES TO BE DESIGNED FOR LOADS INDICATED IN THE DESIGN CRITERIA AND AS FOLLOWS:
   A. TOP CHORD DEAD LOAD = XXX + ADDITIONAL 5 PSF AT OVERFRAMING.
   B. BOTTOM CHORD DEAD LOAD = XXX.
   C. WIND LOAD: WHEN CALCULATING NET UPLIFT REACTIONS, USE MAXIMUM RESISTING DEAD LOAD = XXX PSF ON TOP CHORD AND XXX PSF ON BOTTOM CHORD

4. TRUSS MANUFACTURER TO DESIGN TRUSSES TO SUPPORT MECHANICAL EQUIPMENT AS REQUIRED. ADDITIONAL TRUSSES MAY BE SUPPLIED AS REQUIRED

5. ALL TRUSS TO TRUSS CONNECTORS PER TRUSS MANUFACTURER.

6. WHERE POST OCCURS ABOVE A MANUFACTURED TRUSS, A VERTICAL WEB SHALL BE PROVIDED UNDER THE POST. THE WEB SECTION AREA SHALL BE EQUAL TO OR LARGER THAN POST SECTION AREA. MULTIPLE 2X4S MAY BE USED FOR THE VERTICAL WEB.

7. THE TOP CHORD OF ALL TRUSSES SHALL HAVE A SPECIES WITH SPECIFIC GRAVITY EQUAL TO OR GREATER THAN 0.42.

8. TRUSS MANUFACTURER SHALL LIMIT TOTAL LOAD DEFLECTIONS TO LESS THAN L/240 AND LIVE LOAD DEFLECTIONS TO LESS THAN L/360. DEFLECTION SHALL BE LIMITED SO AS NOT TO CREATE A BEARING CONDITION AT NON-BEARING WALLS. REFER ALSO TO NOTE 11 OF THE WOOD SECTION.

9. CONNECTION OF MANUFACTURED TRUSSES FOR UPLIFT SHALL BE PER THE TABLES ON SHEET S1.1.

10. TRUSSES SHALL BE DESIGNED TO SUPPORT A 250 POUND CONCENTRATED LOAD AT ANY LOCATION ALONG THE BOTTOM CHORD.

STANDARD TRUSSES(2)

REACTIONS TO THE BEARING WALL OR BEAM BELOW:

TRUSS TYPE & TOTAL LENGTH	HARDWARE REQUIRED	NAILING REQUIRED
JACK TRUSSES ≤ 10'-0"	NONE REQUIRED	UPLIFT IS RESISTED BY EXISTING NAILED CONNECTION OF TRUSS TO PLATE(1)
HIP/COMMON TRUSSES ≤ 30'-0"	NONE REQUIRED	UPLIFT IS RESISTED BY EXISTING NAILED CONNECTION OF TRUSS TO PLATE(1)
HIP/COMMON TRUSS 30'-0" ≤ L ≤ 50'-0"	H1 OR H2.5	(6) 8d x 1 1/2" INTO TRUSS (4) 8d x 1 1/2" INTO PLATE
ALL HIP/COMMON DRAG TRUSSES L ≤ 50'-0"	H1 OR H2.5	(6) 8d x 1 1/2" INTO TRUSS (4) 8d x 1 1/2" INTO PLATE
HIP/COM. GIRDER 8FT SETBACK L ≤ 30'-0"	H10 OR (2) H2.5	(8) 8d x 1 1/2" INTO TRUSS (8) 8d x 1 1/2" INTO PLATE
HIP/COM. GIRDER 8FT SETBACK L ≤ 40'-0"	HTS20	(12) 10d x 1 1/2" INTO TRUSS (12) 10d x 1 1/2" INTO PLATE & STUD BLW
HIP/COM. GIRDER 8FT SETBACK L ≤ 50'-0"	(2) HTS20	(12) 10d x 1 1/2" INTO TRUSS (12) 10d x 1 1/2" INTO PLATE & STUD BLW
ALL OTHER NON-DRAG GIRDER TR L ≤ 40'-0"	H1 OR H2.5	(6) 8d x 1 1/2" INTO TRUSS (4) 8d x 1 1/2" INTO PLATE
ALL OTHER GIRDER TRUSSES L ≤ 50'-0"	H10 OR (2) H2.5	(8) 8d x 1 1/2" INTO TRUSS (8) 8d x 1 1/2" INTO PLATE

AT TRUSSES WHERE THE HARDWARE ABOVE CANNOT BE INSTALLED, PROVIDE AN HTS20 STRAP

GABLE END WALL TRUSSES

HARDWARE	NAILING REQUIRED
LTP4 AT 32" OC UNO	(6) 8d x 1 1/2" INTO TRUSS (4) 8d x 1 1/2" INTO PLATE

NOTES:
(1) SEE DETAIL 1/SD-3 FOR STANDARD NAILING REQUIREMENTS
(2) SEE FRAMING PLANS FOR NON-STANDARD UPLIFT HARDWARE

SHEET INDEX

SHT #	SHEET NAME
S1	GENERAL NOTES
S1.1	SCHEDULES AND NOTES
S2	FOUNDATION PLAN
S3	FLOOR FRAMING PLAN
S4	ROOF FRAMING PLAN
S5	SHEAR WALL PLAN
S5.1	SHEAR WALL PLAN
SD-1	STRUCTURAL DETAILS
SD-2	STRUCTURAL DETAILS
SD-2.1	STRUCTURAL DETAILS
SD-3	STRUCTURAL DETAILS
SD-4	STRUCTURAL DETAILS

STRUCTURAL SHEATHING

1. ALL STRUCTURAL SHEATHING SHALL BE C-D INTERIOR SHEATHING WITH EXTERIOR GLUE OR ORIENTED STRAND BOARD (OSB), EXPOSURE I, AND SHALL BEAR THE STAMP OF AN APPROVED TESTING AGENCY. LAY SHEATHING WITH LONG DIMENSION PERPENDICULAR TO SUPPORTS. STAGGER JOINTS AND NAILS.

2. ROOF SHEATHING AT UNBLOCKED DIAPHRAGM (STANDARD, UNO)
   15/32" WOOD STRUCTURAL PANEL: PANEL INDEX = 32/16, UNBLOCKED UNO W/ 8D COMMON NAILS AT 6" O.C. AT ALL BOUNDARIES AND SUPPORTED EDGES, 12" O.C. FIELD. PANELS LESS THAN 2'-0" IN WIDTH SHALL HAVE ALL EDGES BLOCKED.

3. ROOF SHEATHING AT BLOCKED DIAPHRAGM (WHERE NOTED ON PLANS)
   15/32" WOOD STRUCTURAL PANEL: PANEL INDEX = 32/16, BLOCKED. NAIL W/ 8D COMMON NAILS AT 4" O.C. AT ALL BOUNDARIES AND SUPPORTED EDGES, 12" O.C. FIELD, UNO ON PLANS.

4. FLOOR SHEATHING AT UNBLOCKED DIAPHRAGM (STANDARD, UNO)
   23/32" WOOD STRUCTURAL PANEL: T AND G, PANEL INDEX 48/24, UNBLOCKED (UNO.). NAIL WITH 10D COMMON NAILS AT 6" O.C. AT ALL BOUNDARIES AND SUPPORTED EDGES, 12" O.C. FIELD UNO ON PLANS. PANELS LESS THAN 2'-0" IN WIDTH SHALL HAVE ALL EDGES BLOCKED. OPTION: QUIK DRIVE #8 WSNTL WOOD SCREWS MAY BE USED IN LIEU OF 10D COMMON NAILS ABOVE. SPACING SHALL BE SAME AS SHOWN FOR 10D COMMON NAILS PER I.C.C. REPORT ESR-1472.

5. FLOOR SHEATHING AT BLOCKED DIAPHRAGM (WHERE NOTED ON PLANS)
   23/32" WOOD STRUCTURAL PANEL: T AND G, PANEL INDEX = 48/24, BLOCKED. NAIL WITH 16D SINKERS AT 4" O.C. AT ALL BOUNDARIES AND SUPPORTED EDGES, 12" O.C. FIELD UNO ON PLANS. OPTION: QUIK DRIVE #8 X 2 1/4" SCREWS MAY BE USED IN LIEU OF 16D SINKERS ABOVE. SPACING SHALL BE SAME AS SHOWN FOR 10D COMMON NAILS PER I.C.C. REPORT ESR-1472.

6. SHEAR WALL SHEATHING
   PER SHEAR WALL SCHEDULE.

SHOP DRAWINGS

1. SHOP DRAWINGS SHALL BE SUBMITTED FOR ALL STRUCTURAL ITEMS IN ADDITION TO ITEMS REQUIRED BY ARCHITECTURAL SPECIFICATIONS.

2. THE CONTRACTOR SHALL REVIEW ALL SHOP DRAWINGS PRIOR TO SUBMITTAL. ITEMS NOT IN ACCORDANCE WITH CONTRACT DRAWINGS SHALL BE FLAGGED FOR REVIEW.

3. VERIFY ALL DIMENSIONS WITH ARCHITECTURAL DRAWINGS.

4. ANY CHANGES, SUBSTITUTIONS, OR DEVIATIONS FROM ORIGINAL STRUCTURAL DRAWINGS SHALL BE RED-LINED OR FLAGGED BY SUBMITTING PARTIES.

5. THE STRUCTURAL ENGINEER HAS THE RIGHT TO APPROVE OR DISAPPROVE ANY CHANGES TO THE ORIGINAL DRAWINGS AT ANY TIME, BEFORE OR AFTER SHOP DRAWING REVIEW.

6. THE SHOP DRAWINGS DO NOT REPLACE THE ORIGINAL STRUCTURAL DRAWINGS. ITEMS OMITTED OR SHOWN INCORRECTLY BUT NOT FLAGGED BY THE STRUCTURAL ENGINEER OR ARCHITECT ARE NOT TO BE CONSIDERED CHANGES TO THE ORIGINAL CONTRACT DRAWING.

7. THE ADEQUACY OF ENGINEERING DESIGNS AND LAYOUT PERFORMED BY THE OTHERS RESTS WITH THE DESIGNING OR SUBMITTING AUTHORITY.

8. REVIEWING IS INTENDED ONLY AS AN AID TO THE CONTRACTOR IN OBTAINING CORRECT SHOP DRAWINGS. RESPONSIBILITY FOR CORRECTNESS SHALL REST WITH THE CONTRACTOR.

9. THE CONTRACTOR SHALL PROVIDE (1) FILE COPY OF ALL APPROVED SHOP DRAWINGS TO THE STRUCTURAL ENGINEER.

SPECIAL INSPECTIONS

1. PROVIDE SPECIAL INSPECTIONS IN ACCORDANCE WITH SECTION 1705 OF THE BUILDING CODE, AS REQUIRED BY THE PERMITTING AGENCY.

2. WHERE SPECIAL INSPECTION IS REQUIRED, IT SHALL BE PERFORMED BY A REGISTERED DEPUTY INSPECTOR EMPLOYED BY THE OWNER AND APPROVED BY THE GOVERNING JURISDICTION. COPIES OF THE INSPECTION REPORTS SHALL BE SUBMITTED TO THE BUILDING DEPARTMENT AND ARCHITECT/STRUCTURAL ENGINEER FOR REVIEW.

3. ITEMS REQUIRING SPECIAL INSPECTION:

INSPECTION	CODE SECTION
A. POST INSTALLED CONCRETE ANCHORS (PERIODIC)	1705.3

DEFERRED SUBMITTAL ITEMS

1. MFR WOOD TRUSSES.

Sarah Bareng

Digitally signed by Sarah Bareng
DN: CN=Sarah Bareng, E=sarah.bareng@lrneng.com
Reason: I am the author of this document
Date: 2020-07-07 10:07:13

PROFESSIONAL ENGINEER STATE OF NEVADA
SARAH CAMILLE LOTHO BARENG
Exp. 12-31-2020
CIVIL
No. 025375
07-07-2020

JOB NO: 1939-005-201
DESIGNED BY: SLB
DRAWN BY: ACM

ISSUED FOR:
CONSTRUCTION DOCUMENTS
DATE: 06/09/20

SHEET TITLE:
STRUCTURAL GENERAL NOTES

REVISIONS:

L. R. NELSON CONSULTING ENGINEERS
6765 West Russell Rd Suite 200
Las Vegas, Nevada 89118
(702) 798-7978
(702) 451-2296 FAX
www.lrneng.com
• CIVIL
• FORENSICS
• PLANNING
• STRUCTURAL
• SURVEY

ASSURED REAL ESTATE
HENDERSON, NV
LOT 6

S1

SHEARWALL SCHEDULE[2, 5, 8, 11, 12, 13]

SHEARWALL[7, 17]			ONE SIDED SHEARWALL TWO SIDED SHEARWALL[6]		SEISMIC	WIND
MARK	MATERIAL[4, 14]	NAILING	UPPER FLOOR SILL PL CONN[1, 18]	ANCHOR BOLTS[3] (UNO ON FOUNDATION PLAN)	ALLOWABLE SHEAR	
P1	3/8" APA SHEATHING[15]	8dN AT 6" OC EDGES, 12" FIELD[16]	16dS AT 4" OC (STG'D) UNO	1/2" DIA X 10" AT 32" OC	260#/FT	365#/FT
P2	3/8" APA SHEATHING[15]	8dN AT 4" OC EDGES, 12" FIELD[16]	16dS AT 3" OC, (STG'D) UNO	1/2" DIA X 10" AT 24" OC	350#/FT	532#/FT
P3	3/8" APA SHEATHING[9, 15]	8dN AT 3" OC EDGES, 12" FIELD[16]	1/4x6 SCREWS AT 4" OC (STG'D), UNO	1/2" DIA X 10" AT 16" OC	490#/FT	685#/FT
P4	3/8" APA SHEATHING[9, 15]	8dN AT 2" OC EDGES, 12" FIELD[16]	1/4x6 SCREWS AT 4" OC (STG'D), UNO	1/2" DIA X 10" AT 12" OC	600#/FT	895#/FT
P5	15/32" APA SHEATHING[10]	10dN AT 2" OC EDGES, 12" FIELD[16]	1/4x6 SCREWS AT 3" OC (STG'D), UNO	1/2" DIA X 10" AT 9" OC	770#/FT	1078#/FT

SCHEDULE NOTES:

(1) SEE DETAIL 7/SD-2 FOR ADDT'L INFO AT UPPER FLOOR SILL PLATE CONNECTION FOR MULTI-STORY PLANS ONLY. DOES NOT APPLY TO SINGLE STORY PLANS. SEE PLAN FOR SILL PLATE AND SHEAR CONNECTIONS AT EXTERIOR WALLS.
(2) OPENINGS IN SHEARWALL SHEATHING SHALL NOT EXCEED 8 INCHES IN ANY DIRECTION FOR A SINGLE OPENING OR THE SUM OF ANY TWO OR MORE OPENINGS ON COMMON OR OVERLAPPING VERTICAL OR HORIZONTAL LINES. OPENINGS NOT GREATER THAN 8 INCHES DO NOT REQUIRE BLOCKING AROUND THE PENETRATION. CONTACT THE ENGINEER OF RECORD FOR REQUIREMENTS AT OPENINGS NOT OTHERWISE DETAILED.
(3) MINIMUM (2) 1/2" DIA ANCHORS PER SHEAR WALL. SEE FOUNDATION HARDWARE NOTES, NOTE 2 ON THE GENERAL NOTES SHEET, S1. ALL ANCHOR BOLTS SHALL HAVE 3" x 3" x 0.229" PLATE WASHERS.
(4) APA RATED (STRUCTURAL II) PLYWOOD OR OSB.
(5) SEE DETAIL 11/SD-2 WHERE WALL FRAMING STEPS OR PERPENDICULAR WALL INTERSECTS SHEAR WALL.
(6) FOR SHEAR PANELS ON TWO SIDES OF WALL, USE ONE-HALF THE SPACING GIVEN IN THE SCHEDULE FOR SILL PLATE CONNECTION AND ANCHOR BOLT SPACING, UNO.
(7) DOUBLE SIDED SHEARWALLS SHALL HAVE VERTICAL PANEL JOINTS OFFSET TO FALL ON DIFFERENT STUDS OR USE SINGLE 3" NOMINAL STUDS (MIN) AT JOINTS. AT THE ENDS OF THE SHEARWALL, 4X NOMINAL MEMBERS ARE REQUIRED. NAILS ON EACH SIDE SHALL BE STAGGERED.
(8) ALL SHEARWALLS REQUIRE DOUBLE 2X TOP PLATES, U.N.O. AT NON-BEARING SHEAR WALLS, SHORTEN STUDS 1/4 INCH TO PROVIDE DEFLECTION CLEARANCE.
(9) P2, P3 AND P4 SHEARWALLS SHALL REQUIRE THE FOLLOWING:
  A. STAGGER NAILING ALONG PLYWOOD JOINTS AND SILL PLATES.
  B. SINGLE 3" NOMINAL MEMBERS AT ALL FRAMING MEMBERS RECEIVING EDGE NAILING FROM ABUTTING PANELS. 3" NOMINAL MEMBERS AT SINGLE SIDED SHEARWALL MAY BE CONSTRUCTED W/ (2) 2X MEMBERS FASTENED TOGETHER W/ (2) ROWS OF 16d SINKERS AT 4" OC.
(10) P5 SHEARWALLS SHALL REQUIRE SINGLE 3" NOMINAL MEMBERS AT ALL FRAMING MEMBERS RECEIVING EDGE NAILING FROM ABUTTING PANELS (MIN). STAGGER JOINT AND SILL PLATE NAILING.
(11) ALL SHEARWALL LENGTHS NOTED ON PLAN ARE MINIMUM REQUIRED AND MAY BE INCREASED WITHOUT REVIEW.
(12) SHEATHING MAY BE PLACED ON EITHER FACE OF DESIGNATED WALL, UNO.
(13) ALLOWABLE SHEAR CAPACITIES ARE IN ACCORDANCE WITH AF&PA SDPWS TABLE 4.3A WITH APPLICABLE OMEGA FACTORS INCLUDED.
(14) APA SHEATHING AND GYPSUM SHEATHING MAY BE INSTALLED WITH THE LONG OR SHORT DIRECTION PERPENDICULAR TO THE FRAMING. WHERE APA SHEATHING IS INSTALLED WITH THE SHORT DIRECTION PERPENDICULAR TO THE FRAMING, THE FRAMING MUST BE 16" ON CENTER (MAX). WHERE GYPSUM SHEATHING IS INSTALLED WITH THE SHORT DIRECTION PERPENDICULAR TO THE FRAMING ALL PANEL EDGES MUST BE BLOCKED AND NAILED.
(15) 3/8" SHEATHING MAY BE REPLACED WITH 7/16" OR 15/32" SHEATHING WITHOUT ADDITIONAL REVIEW.
(16) ALL VERTICAL AND HORIZONTAL PANEL EDGES TO BE BLOCKED AND NAILED.
(17) STUDS SHALL BE 24" OC (MAX). FOR 3/8" AND 7/16" SHEATHING, FIELD NAILING SHALL BE REDUCED TO 6" OC WHERE STUD SPACING IS GREATER THAN 16" OC.
(18) SILL PLATE CONNECTORS SHALL BE PER SHEAR TRANSFER DETAIL SPECIFIED ON PLANS.

HOLDOWN/STRAP SCHEDULE[1, 2]

HD/STRAP	EMBED AT FND AND / OR ANCHOR BOLT	CONN TO (2) 2X STUD, UNO[3, 6, 10]
CS16	N/A	EXTEND STRAP 16" MIN. EA. END W/ (13) 8dN TO (2) 2X STUD ABOVE AND BELOW FLOOR FRAMING
(2) CS16	N/A	EXTEND STRAP 16" MIN. EA. END W/ (13) 8dN TO (2) 2X STUD ABOVE AND BELOW FLOOR FRAMING
CMSTC16	N/A	EXTEND STRAP 25" MIN. EA. END W/ (28) 16d SINKERS TO (2) 2X STUD ABOVE AND BELOW FLOOR FRAMING
CMST14	N/A	EXTEND STRAP 32" MIN. EA. END W/ (33) 16dN TO (3) 2X STUD ABOVE AND BELOW FLOOR FRAMING
CMST12	N/A	EXTEND STRAP 40" MIN. EA. END W/ (42) 16dN TO (3) 2X STUD ABOVE AND BELOW FLOOR FRAMING
LSTHD8[4,11]	8" EMBED	(20) 16d SINKERS
STHD10[4,11]	10" EMBED	(24) 16d SINKERS
STHD14[4,11]	14" EMBED	(30) 16d SINKERS
HTT5	SSTB24 W/ 21" EMBED[12]	(26) 16dN X 2 1/2" NAILS
HDU2	SSTB24 W/ 21" EMBED[12]	(6) SDS 1/4 X 2 1/2 SCREWS W/ MIN (2) 2X POSTS
HDU4	SSTB24 W/ 21" EMBED[12]	(10) SDS 1/4 X 2 1/2 SCREWS W/ MIN (2) 2X POSTS
HDU5	SSTB24 W/ 21" EMBED[12]	(14) SDS 1/4 X 2 1/2 SCREWS W/ MIN (2) 2X POSTS
HDU8	SSTB34 W/ 29" EMBED[13]	(20) SDS 1/4 X 2 1/2 SCREWS W/ MIN (3) 2X POSTS
HDU11	1" DIA AB W/ 9" MIN EMBED W/ MIN 28" SQ x 14" DEEP FTG[8]	(30) SDS 1/4 X 2 1/2 SCREWS W/ MIN 4X8 POST[9]
HDU14	1" DIA AB W/ 10" MIN EMBED W/ MIN 30" SQ X 15" DEEP FTG[7]	(36) SDS 1/4 X 2 1/2 SCREWS W/ MIN 4X8 POST[9]

SCHEDULE NOTES:

(1) HD/STRAP SHALL BE SIMPSON OR EQUAL W/ ICC APPROVAL. ALL SUBSTITUTES SHALL BE REVIEWED BY THE ENGINEER OF RECORD BEFORE INSTALLATION.
(2) FIXED-LENGTH STRAPS SHALL BE INSTALLED WITH AN EQUAL LENGTH OVERLAPPING CONNECTED MEMBERS AND AN EQUAL NUMBER OF FASTENERS IN EACH MEMBER.
(3) STITCH NAIL EACH STUD AT MULTIPLE 2x STUDS TOGETHER WITH 16d SINKERS AT:
  4" OC FOR P3 AND P4 SHEAR WALLS
  6" OC FOR ALL OTHER SHEAR WALLS
(4) FOR CONCRETE SPALLS LESS THAN 4", THERE IS NO LOAD REDUCTION AND NO FURTHER REVIEW BY EOR IS REQUIRED.
(5) SEE DETAIL 4/SD-2 FOR ADDL CRITERIA AT UPPER FLOOR STRAPS (WHERE OCCURS).
(6) EDGE NAIL SHT'G TO EA MEMBER OF MULTPLE POST, OFFSET 1/2 SPACING BTWN MEMBERS.
(7) ASTM F1554-55 BOLT W/ HEAVY SQUARE NUT OR 1/4 X 1 3/4 X 1 3/4 PLATE WASHER REQUIRED FOR FULL LOAD. REDUCE ALLOWABLE LOAD TO 13180 LBS FOR ASTM GRADE 36 BOLT. MINIMUM EMBEDMENT IS FROM TOP OF FOOTING.
(8) ASTM GRADE 36 BOLT W/ SQUARE OR HEAVY HEX HEAD OR NUT REQUIRED. MINIMUM EMBEDMENT IS FROM TOP OF FOOTING.
(9) PROVIDE 6X8 POST AT 2X6 WALLS, MULTIPLE STUDS NOT ALLOWED.
(10) END POST TO BE FULL HEIGHT MEMBERS, UNO.
(11) STRAPS MAY BE PLACED ON EITHER FACE OF DESIGNATED WALL AND ARE NOT REQUIRED TO OCCUR ON SAME FACE AS SHEATHING, UNO.
(12) AT GARAGE STEMWALL LOCATIONS USE SSTBL.
(13) WHEN SLAB AND FOOTINGS ARE PLACED AS A MONO-POUR, SSTB28 WITH 25" EMBEDMENT MAY BE SUBSTITUTED FOR THE SSTB34 SPECIFIED.

FOUNDATION NOTES:

A. AT INTERIOR BEARING WALLS, WITHOUT DEEPENED FOOTINGS, USE 1/2" DIA TITEN HD HIGH STRENGTH SCREW ANCHORS IN LIEU OF ANCHOR BOLTS.

B. SEE DETAIL 1/SD-1 FOR PERIMETER FOOTING EMBEDMENT DEPTH.

C. VERIFY ALL DIMENSIONS WITH ARCHITECTURAL DRAWINGS.

FRAMING NOTES:

1. ALL EXTERIOR WALLS AND INTERIOR BEARING AND SHEAR WALLS TO BE MIN 2x4 AT 16" O.C. DFL STUD GRADE, UNO. SEE FRAMING PLANS FOR NON-TYPICAL STUD SIZE AND SPACING.
2. TRIMMER / KING STUD SCHEDULE, UNO.

	OPENING SPAN (L)	TRIMMERS	KING STUDS
2x4 WALLS	L < 6'-0"	1	1
	6'-0" ≤ L < 10'-0"	2	2
	10'-0" ≤ L < 18'-0"	2	3
2x6 WALLS	L < 8'-0"	1	1
	8'-0" ≤ L < 12'-0"	2	2
	12'-0" ≤ L < 20'-0"	2	3

3. BLOCKED DIAPHRAGM - SEE STRUCTURAL GENERAL NOTES SHEET S1.
4. FOR TYPICAL OVERFILL FRAMING WHERE REQUIRED BY TRUSS SHOP DRAWINGS, SEE DETAILS 4/SD-3 OR 5/SD-3.
5. INTERIOR BEARING WALLS
6. BEAM AND HEADER SIZES INDICATED ON THIS PLAN ARE MINIMUM. LARGER SIZES OR HIGHER GRADE LUMBER MAY BE SUBSTITUTED.
7. TOP PLATE SPLICES PER DETAIL 3/SD-2, UNO.
8. SEE DETAIL 8/SD-2 FOR ADDITIONAL FRAMING REQUIREMENTS.

LEDGER & HANGER SCHEDULE:

UNLESS OTHERWISE NOTED 2X LEDGERS WHERE DETAILED SHALL BE AS FOLLOWS:

		TRUSS		LEDGER AND NAILING[1,2,6,10,11]	MIN HANGER, UNO [3,4,5,11]
		SPAN (L)	SPACING (MAX)		
ROOF LOAD		L ≤ 8'-0"	16" O.C.	2X6 W/ (3) 16d AT 16"OC	LUS24/JUS24
			24" O.C.	2X8 W/ (5) 16d AT 24"OC	LUS24/JUS24
		L ≤ 16'-0"	24" O.C.	2X8 W/ (5) 16d AT 16"OC	LUS26/JUS26
				2X12 W/ (8) 16d AT 24"OC	LUS26/JUS26
		L ≤ 24'-0"	24" O.C.	2X12 W/ (8) 16d AT 16"OC	LUS28/JUS28
				2X12 W/ 2 COLUMNS OF (8) 16d AT 24"OC	HUS28/HUS28
FLOOR LOAD	4x MEMBER	L ≤ 10'-0"	16" O.C.	2X8 W/ (5) 16d AT 16"OC	LUS46/JUS46
			24" O.C.	2X10 W/ 2 COLUMNS OF (6) 16d AT 24"OC	LUS46/JUS46
		L ≤ 20-0"	24" O.C.	2X10 W/ 2 COLUMNS OF (6) 16d AT 16"OC	LUS48/JUS48
			24" O.C.	2X12 W/ 2 COLUMNS OF (8) 16d AT 24"OC	HUS48/HUS48
FLOOR LOAD	2x MEMBER	L ≤ 10'-0"	16" O.C.	2X8 W/ (5) 16d AT 16"OC	LUS26/JUS26
			24" O.C.	2X10 W/ 2 COLUMNS OF (6) 16d AT 24"OC	LUS26/JUS26
		L ≤ 20-0"	24" O.C.	2X10 W/ 2 COLUMNS OF (6) 16d AT 16"OC	LUS28/JUS28
			24" O.C.	2X12 W/ 2 COLUMNS OF (8) 16d AT 24"OC	HUS28/HUS28
DECK LOAD	2x MEMBER	L ≤ 10'-0"	16" O.C.	2X10 W/ (2) 1/4"x3" SCREWS AT 16" OC	LUS26/JUS26
			24" O.C.	2X10 W/ 2 COLUMNS OF (2) 1/4"x3" SCREWS AT 24" OC	LUS26/JUS26
		L ≤ 15-0"	24" O.C.	2X10 W/ 2 COLUMNS OF (2) 1/4"x3" SCREWS AT 16" OC	LUS28/JUS28
			24" O.C.	2X10 W/ 2 COLUMNS OF (3) 1/4"x3" SCREWS AT 24" OC	HUS28/HUS28

SCHEDULE NOTES:

(1) TWO COLUMNS OF FASTENERS REQUIRE MIN SUPPORTING MEMBER RECEIVING FASTENERS OF 3" OR (2)2X IN WIDTH (ENDS OF 4X2 OR DOUBLE TRUSSES ARE ACCEPTABLE). SPACE FASTENERS MIN 1" APART IN EACH DIRECTION.
(2) SPACING SHOWN EQUALS SPACING OF FRAMING MEMBERS RECEIVING FASTENERS.
(3) HANGERS LISTED IN ORDER ARE BY SIMPSON STRONG-TIE AND USP, RESPECTIVELY.
(4) LISTED HANGERS ARE MINIMUM HANGERS REQUIRED WHERE NOT OTHERWISE NOTED ON THE STRUCTURAL DRAWINGS.
(5) SPACING SHOWN FOR HANGERS IS SPACING OF THE FRAMING MEMBER SUPPORTED BY THE HANGER.
(6) LEDGER MATERIAL SHALL BE DFL #2 OR BETTER UNO. LEDGER AT DECK SHALL BE PRESSURE-PRESERVATIVE TREATED OR NATURALLY DURABLE WOOD.
(7) PROVIDE THA218 (MIN) HANGER FOR ROOF TRUSS TO BEAM CONNECTIONS FOR ALL BEAM DEPTHS GREATER THAN 10 INCHES.
(8) PROVIDE THA418 (MIN) HANGER FOR FLOOR TRUSS TO BEAM CONNECTIONS FOR ALL BEAM DEPTHS GREATER THAN 10 INCHES.
(9) PROVIDE THA422 (MIN) HANGER FOR FLOOR TRUSS TO BEAM CONNECITONS FOR ALL BEAM DEPTHS GREATER THAN 18 INCHES.
(10) ALL SIMPSON SCREWS NOTED SHALL BE STRONG DRIVE SDS SCREWS. ALL USP SCREWS NOTED SHALL BE WS SCREWS.
(11) HANGERS AND FASTENERS WITH EXTERIOR EXPOSURE SHALL BE STAINLESS STEEL, UNLESS NOTED OTHERWISE.

JOB NO: 1939-005-201
DESIGNED BY: SLB
DRAWN BY: ACM

ISSUED FOR:
CONSTRUCTION DOCUMENTS
DATE: 06/09/20
SHEET TITLE: SCHEDULES AND NOTES

REVISIONS:

L. R. NELSON CONSULTING ENGINEERS
CIVIL • FORENSICS • PLANNING • STRUCTURAL • SURVEY
6765 West Russell Rd. Suite 200
Las Vegas, Nevada 89118
(702) 798-7978
(702) 451-2296 FAX
www.lrneng.com

ASSURED REAL ESTATE
HENDERSON, NV
LOT 6

PROFESSIONAL ENGINEER STATE OF NEVADA
SARAH CAMILLE OTHO BARENGO
Exp. 12-31-2020
CIVIL
No. 025375
07-07-2020

S1.1

FOOTING AND PIER SCHEDULE

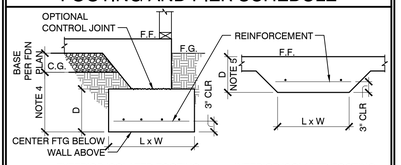

F.G. = FINISHED GRADE
C.G. = COMPACTED SUB-GRADE

	MARK	SIZE L x W x D	REINFORCEMENT	REMARKS
PIER	P1	NOTE 1	(4) #4 DOWELS W/ 6" HOOK (1) #3 TIE	NOTE 2
FOOTING	F1	L x W x 1'-0"	#4 AT 12" O.C. EA WAY BOTT	NOTE 6
	F2	2'-0" SQ x 1'-0"	(2) #4 EA WAY, BOTT	
	F2.5	2'-6" SQ x 1'-0"	(3) #4 EA WAY, BOTT	
	F3	3'-0" SQ x 1'-0"	(3) #4 EA WAY, BOTT	
	F4	4'-0" SQ x 1'-0"	(5) #4 EA WAY, BOTT	

FOOTING AND PIER NOTES:

1. SIZE TO MATCH ARCH'L. BOXED COLUMN (SEE DETAIL 11/SD-1)
2. TOP OF PIER=FINISHED FLOOR
3. TIES SHALL HAVE 1 1/2" COVER & BE LOCATED 2" FROM TOP OF PIER
4. EMBEDMENT BELOW COMPACTED SUB-GRADE PER DETAIL 1/SD-1
5. SEE DETAIL 4/SD-1 FOR MINIMUM EMBEDMENT DEPTH FROM TOP OF SLAB OR LOWEST ADJACENT COMPACTED SUBGRADE
6. SIZE TO MATCH BOX COLUMN + 6" EA. SIDE

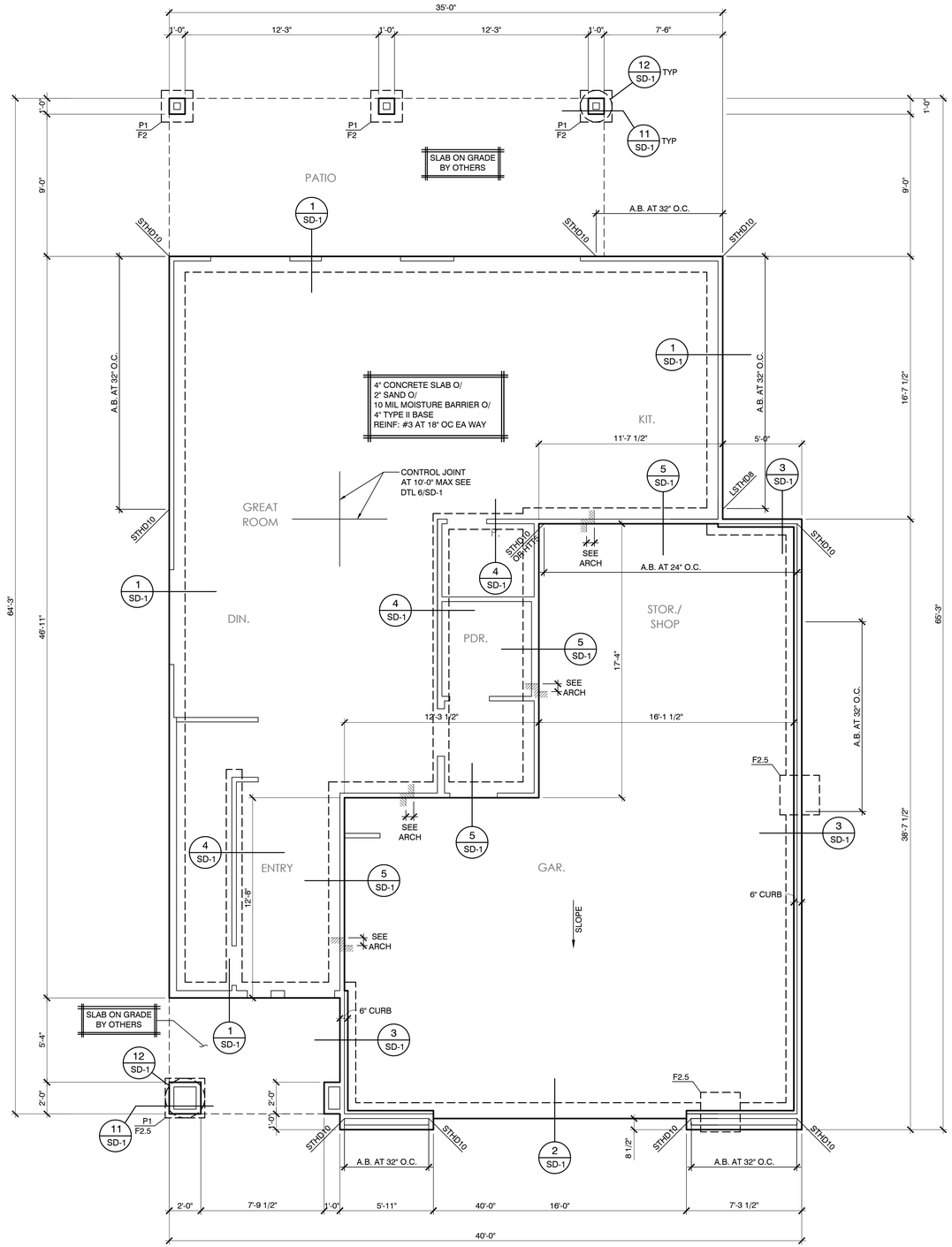

FOUNDATION PLAN

1/4"=1'-0"

SEE SHEET S1.1 FOR FOUNDATION NOTES AND HOLDOWN SCHEDULE

JOB NO: 1939-005-201
DESIGNED BY: SLB
DRAWN BY: ACM

ISSUED FOR:
CONSTRUCTION DOCUMENTS
DATE: 06/09/20

SHEET TITLE:
FOUNDATION PLAN

REVISIONS:

L. R. NELSON CONSULTING ENGINEERS
CIVIL • FORENSICS • PLANNING • STRUCTURAL • SURVEY
6765 West Russell Rd. Suite 200
Las Vegas, Nevada 89118
(702) 798-7978
(702) 451-2296 FAX
www.lrneng.com

ASSURED REAL ESTATE
HENDERSON, NV
LOT 6

PROFESSIONAL ENGINEER STATE OF NEVADA
SARAH CAMILLE OTHO BARENGO
Exp. 12-31-2020
CIVIL
No. 025375
07-07-2020

S2

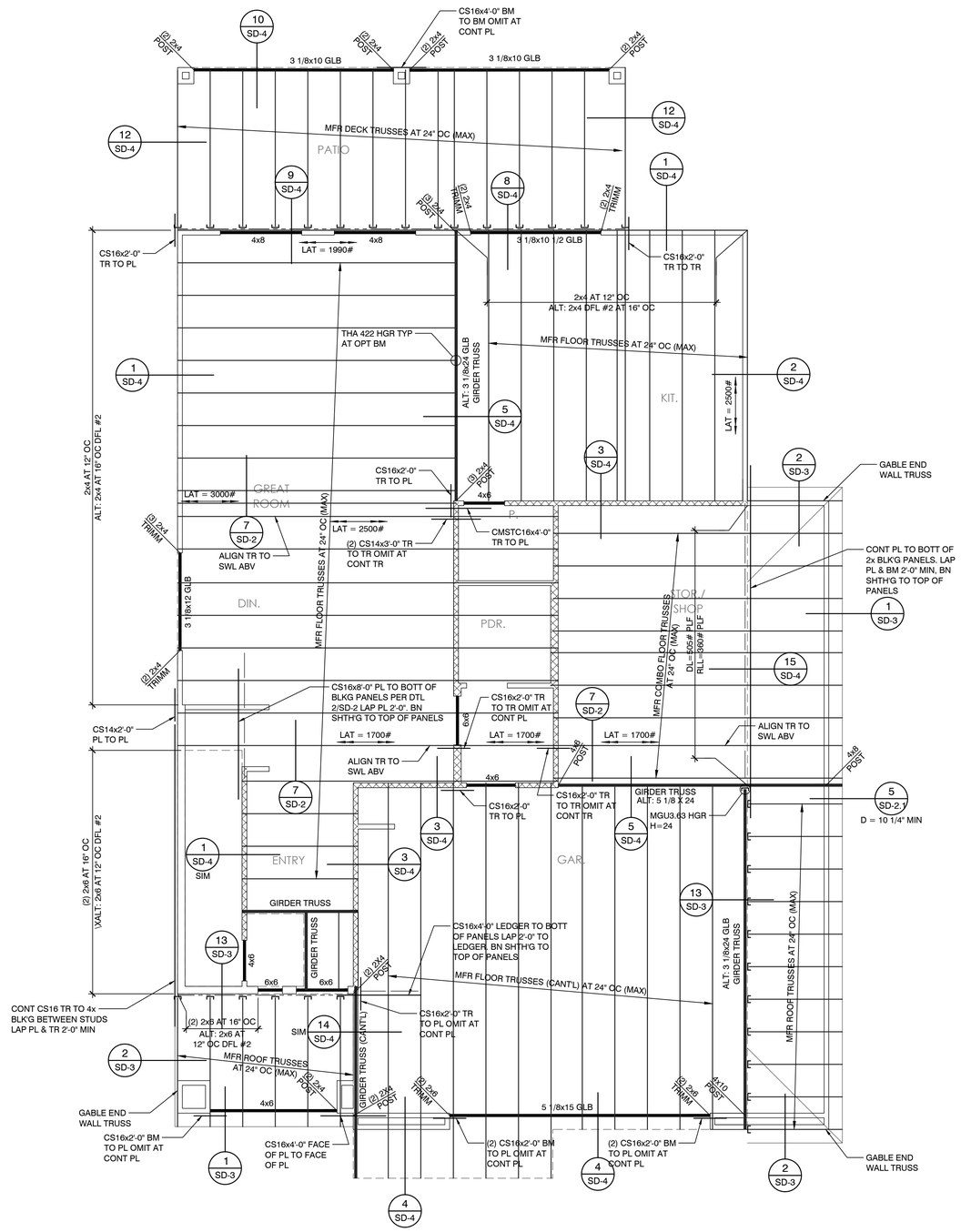

FLOOR FRAMING PLAN

1/4"=1'-0"

SEE SHEET S1.1 FOR FRAMING NOTES

JOB NO: 1939-005-201
DESIGNED BY: SLB
DRAWN BY: ACM

ISSUED FOR:
CONSTRUCTION DOCUMENTS
DATE: 06/09/20

SHEET TITLE:
FRAMING PLAN

REVISIONS:

L. R. NELSON CONSULTING ENGINEERS
6765 West Russell Rd. Suite 200
Las Vegas, Nevada 89118
(702) 798-7978
(702) 451-2296 FAX
www.lrneng.com
• CIVIL
• FORENSICS
• PLANNING
• STRUCTURAL
• SURVEY

ASSURED REAL ESTATE
HENDERSON, NV
LOT 6

PROFESSIONAL ENGINEER STATE OF NEVADA
SARAH CAMILLE PLOTHO BARENGO
Exp. 12-31-2020
CIVIL
No. 025375
07-07-2020

S3

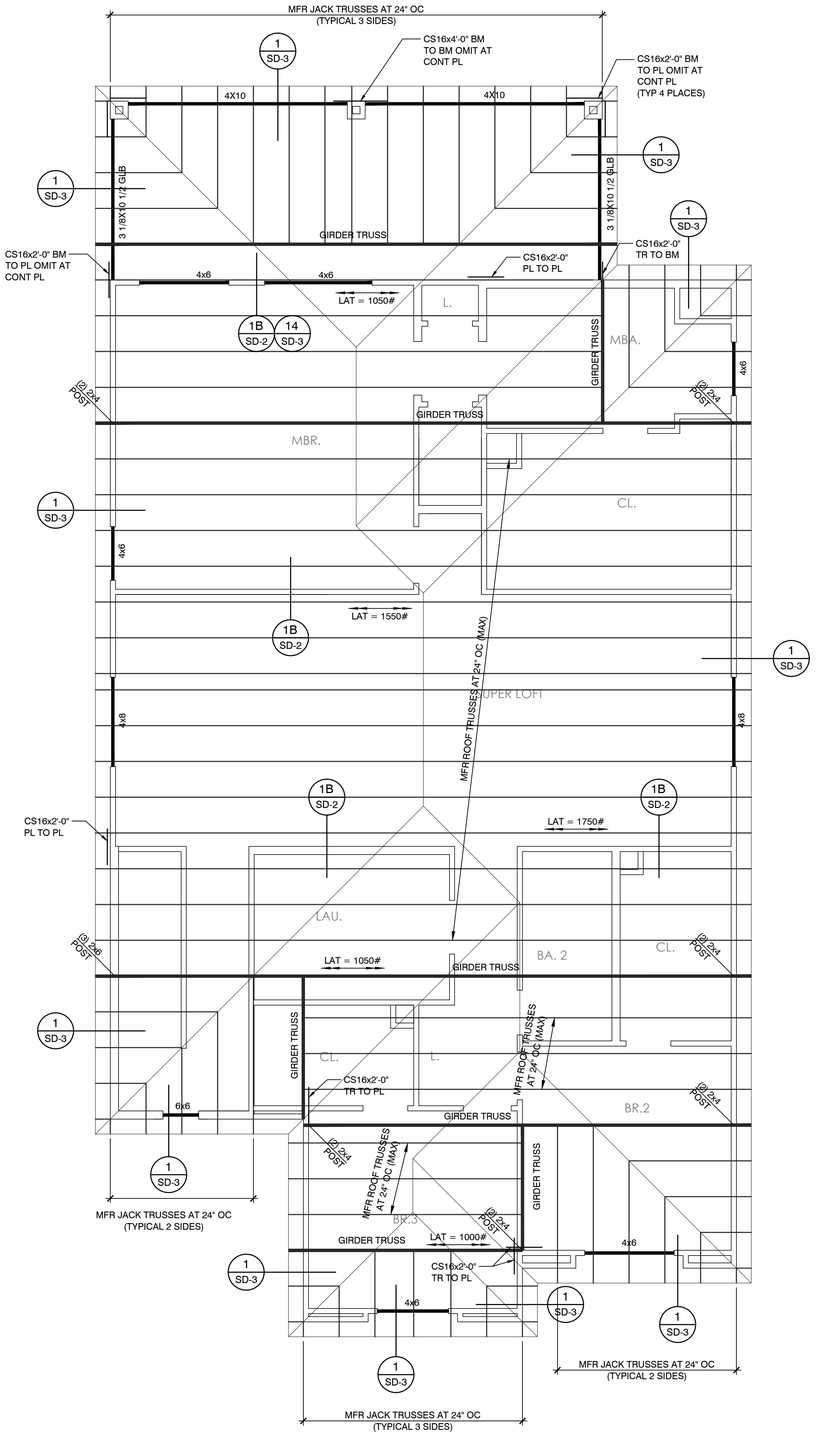

ROOF FRAMING PLAN

1/4" = 1'-0"

SEE SHEET S1.1 FOR FRAMING NOTES

JOB NO: 1939-005-201
DESIGNED BY: SLB
DRAWN BY: ACM

ISSUED FOR:
CONSTRUCTION DOCUMENTS
DATE: 06/09/20

SHEET TITLE:
FRAMING PLAN

REVISIONS:

L. R. NELSON CONSULTING ENGINEERS
6765 West Russell Rd. Suite 200
Las Vegas, Nevada 89118
(702) 798-7978
(702) 451-2296 FAX
www.lrneng.com
CIVIL
FORENSICS
PLANNING
STRUCTURAL
SURVEY

ASSURED REAL ESTATE
HENDERSON, NV
LOT 6

PROFESSIONAL ENGINEER STATE OF NEVADA
SARAH CAMILLE OTHO BARENGO
Exp. 12-31-2020
CIVIL
No. 025375
07-07-2020

S4

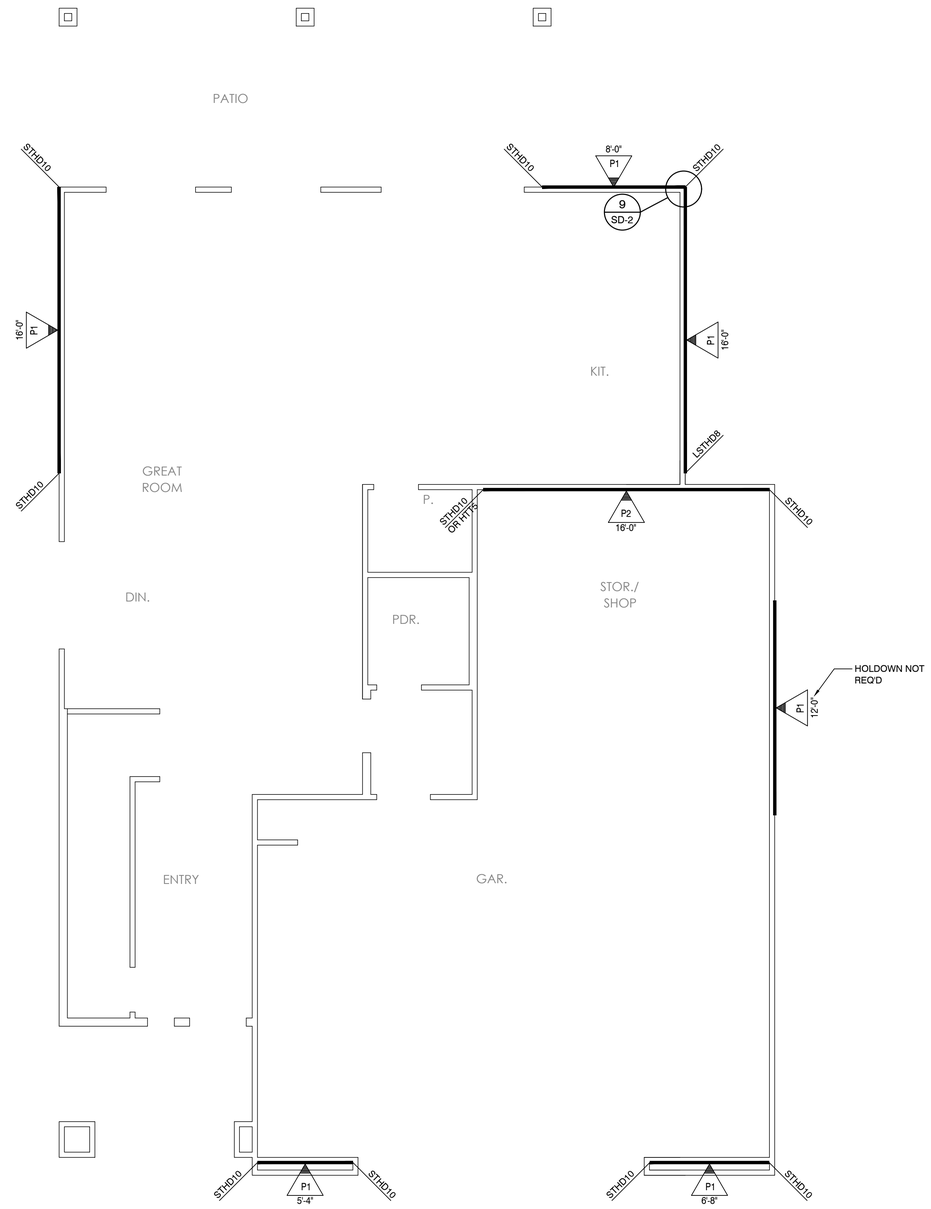

1ST LEVEL SHEAR WALL PLAN

1/4"=1'-0"

SEE SHEET S1.1 FOR SHEAR WALL AND HOLDOWN SCHEDULES

JOB NO: 1939-005-201
DESIGNED BY: SLB
DRAWN BY: ACM

ISSUED FOR:
CONSTRUCTION DOCUMENTS
DATE: 06/09/20

SHEET TITLE:
SHEAR WALL PLAN

REVISIONS:

L. R. NELSON CONSULTING ENGINEERS
6765 West Russell Rd. Suite 200
Las Vegas, Nevada 89118
(702) 798-7978
(702) 451-2296 FAX
www.lrneng.com
CIVIL
FORENSICS
PLANNING
STRUCTURAL
SURVEY

ASSURED REAL ESTATE
HENDERSON, NV
LOT 6

PROFESSIONAL ENGINEER - STATE OF NEVADA
SARAH CAMILLE PLOTHO BARENGO
Exp. 12-31-2020
CIVIL
No. 025375
07-07-2020

S5

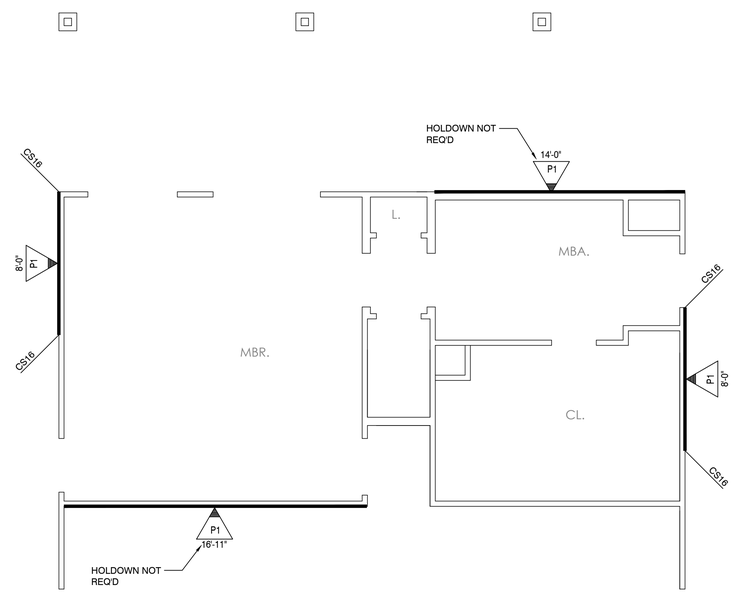

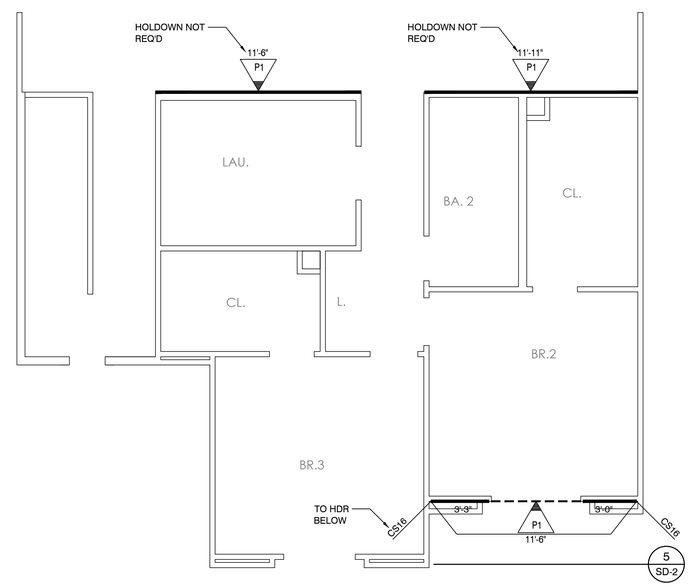

2ND LEVEL SHEAR WALL PLAN

1/4"=1'-0"

SEE SHEET S1.1 FOR SHEAR WALL AND HOLDOWN SCHEDULES

JOB NO: 1939-005-201
DESIGNED BY: SLB
DRAWN BY: ACM

ISSUED FOR:
CONSTRUCTION DOCUMENTS
DATE: 06/09/20

SHEET TITLE:
SHEAR WALL PLAN

REVISIONS:

L. R. NELSON CONSULTING ENGINEERS
6765 West Russell Rd. Suite 200
Las Vegas, Nevada 89118
(702) 798-7978
(702) 451-2296 FAX
www.lrneng.com
• CIVIL
• FORENSICS
• PLANNING
• STRUCTURAL
• SURVEY

ASSURED REAL ESTATE
HENDERSON, NV
LOT 6

PROFESSIONAL ENGINEER-STATE OF NEVADA
SARAH CAMILLE BLOTHO BARENGO
Exp. 12-31-2020
CIVIL
No. 025375
07-07-2020

S5.1

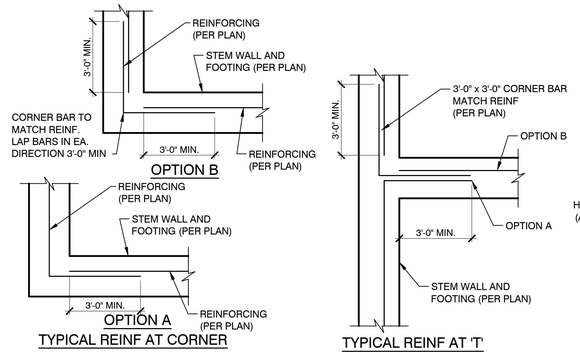

13 CONCRETE WALL/FOOTING REINFORCING

NTS

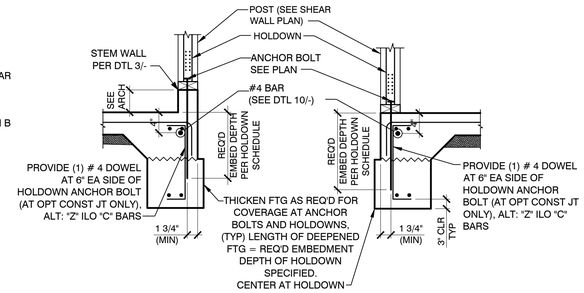

SEE DTL 1/- FOR INFORMATION NOT SHOWN

9 HOLDOWN W/ ANCHOR BOLT (TYPICAL)

NTS

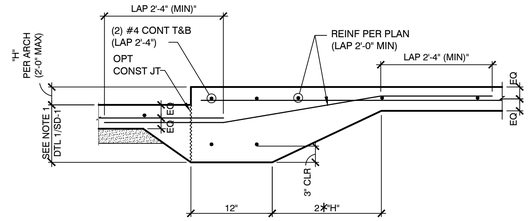

NOTE 1:
GREATER DEPTH AS REQUIRED FOR HOLDOWNS AND HOLDOWN ANCHOR BOLTS.

5 STEP IN SLAB

NTS

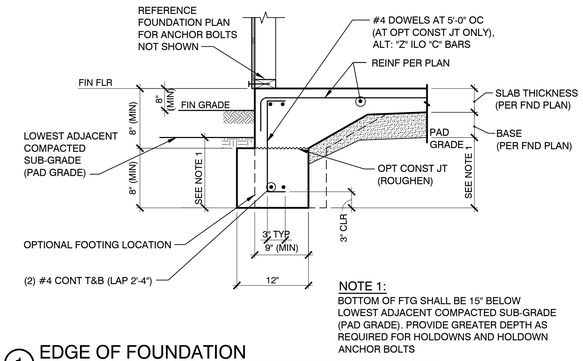

NOTE 1:
BOTTOM OF FTG SHALL BE 15" BELOW LOWEST ADJACENT COMPACTED SUB-GRADE (PAD GRADE). PROVIDE GREATER DEPTH AS REQUIRED FOR HOLDOWNS AND HOLDOWN ANCHOR BOLTS

1 EDGE OF FOUNDATION

NTS

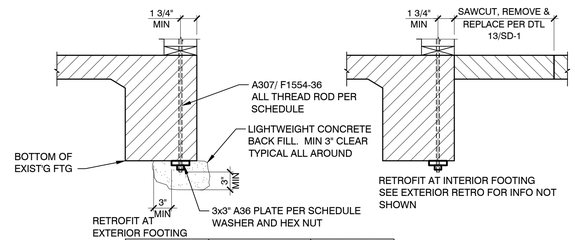

HOLDOWN(1)	ANCHOR ROD SIZE	BEARING PLATE
LSTHD8, STHD10, STHD14, HTT5, HDU2, HDU4, HDU5	5/8" A307 THREADED ROD	3 X 3 X 1/2"
HDU8	7/8" A307 THREADED ROD	3 X 3 X 3/4"

1. PROVIDE HDU4 FOR RETROFIT AT LSTHD8 & STHD10. PROVIDE HDU5 FOR RETROFIT AT STHD14

14

NTS

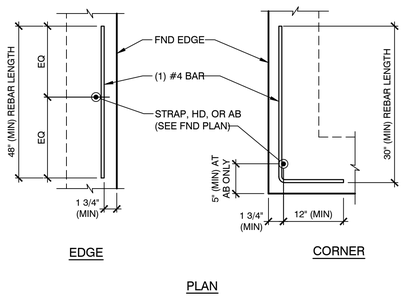

10 REINFORCING AT HOLDOWNS

NTS

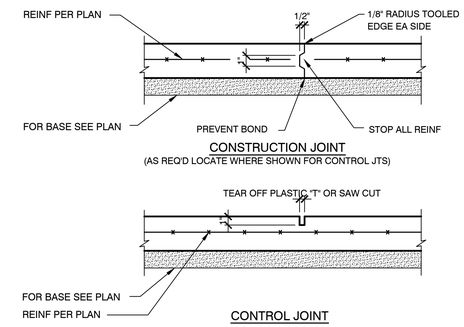

6 TYP SLAB JOINTS

NTS

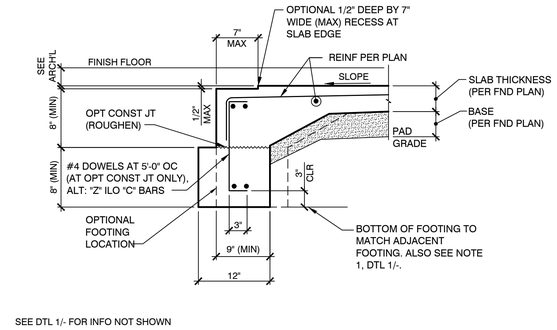

SEE DTL 1/- FOR INFO NOT SHOWN

2 EDGE OF FOUNDATION (GARAGE)

N.T.S.

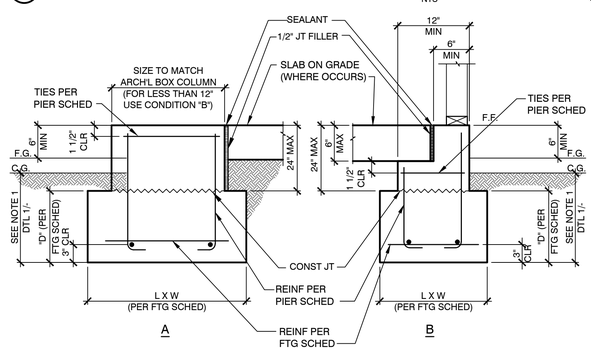

11 CONCRETE PIER AND FOOTING

NTS

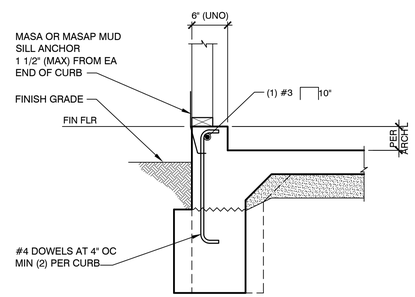

SEE DTL 3/- FOR INFORMATION NOT SHOWN

7 CURB BETWEEN GARAGE DOORS

NTS

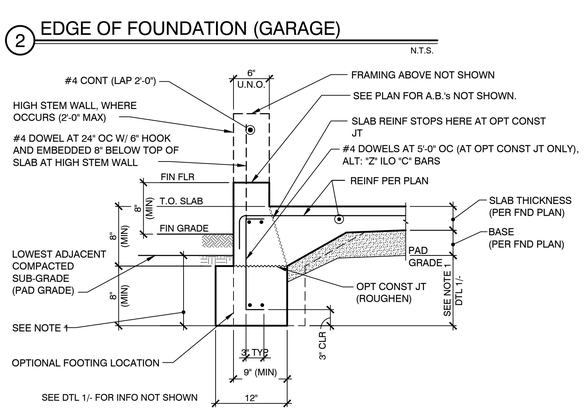

3 EDGE OF FOUNDATION (CURB)

NTS

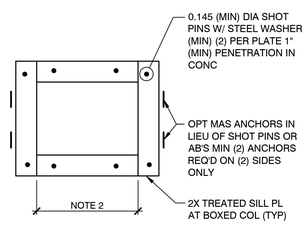

NOTES:
1. THIS DETAIL IS FOR BOX COL SILL PL (SEE FND PLAN FOR LOCATIONS)
2. PROVIDE MAS ANCHORS AT PL LENGTHS LESS THAN 8"

PLAN

12 BOX COLUMN SILL PLATE

NTS

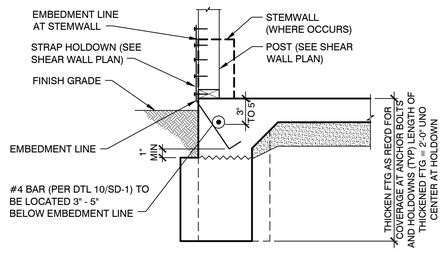

SEE DTL 1/- FOR INFORMATION NOT SHOWN

8 STRAP HOLDOWN

NTS

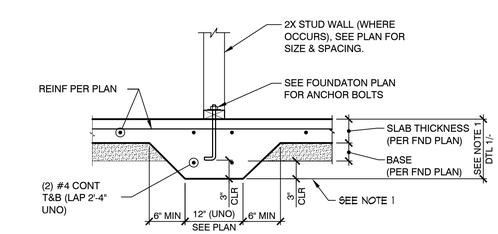

NOTE 1:
GREATER DEPTH AS REQUIRED FOR HOLDOWNS AND HOLDOWN ANCHOR BOLTS.

4 INTERIOR CONTINUOUS FTG

NTS

JOB NO: 1939-005-201
DESIGNED BY: SLB
DRAWN BY: ACM

ISSUED FOR:
CONSTRUCTION DOCUMENTS
DATE: 06/09/20

SHEET TITLE:
STRUCTURAL DETAILS

REVISIONS:

L. R. NELSON CONSULTING ENGINEERS
CIVIL • FORENSICS • PLANNING • STRUCTURAL • SURVEY
6765 West Russell Rd. Suite 200
Las Vegas, Nevada 89118
(702) 798-7978
(702) 451-2296 FAX
www.lrneng.com

ASSURED REAL ESTATE
HENDERSON, NV
LOT 6

PROFESSIONAL ENGINEER - STATE OF NEVADA
SARAH CAMILLE BUTHO BARENGO
Exp. 12-31-2020
CIVIL
No. 025375
07-07-2020

SD-1

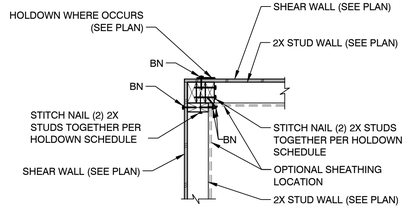

9 TWO SHEAR WALLS AT CORNER W/ SHARED HOLDOWN

NTS

NOTES:
1. EXTEND STRAP TO END OF SHEAR WALL
2. EDGE NAILING NOT REQUIRED ABOVE AND BELOW OPENING

STRAP PER PLAN (CS16 UNO) O/ HDR AND 2X BLK'G W/ (MIN) 8d NAILS AT 4 1/8" OC (LOWER STRAP IS OMITTED AT DOOR OPENING'S) (PROVIDE 4X BLK'G WHERE REQ'D)

*AT P3 SHEAR WALL SPECIFICATION PROVIDE 8d NAILS AT 2 1/8" OC AT CS16 STRAPS

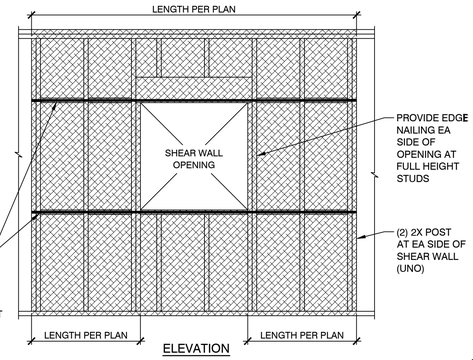

ELEVATION

5 APPLICABLE ONLY WHERE SPECIFIED ON PLANS

NTS

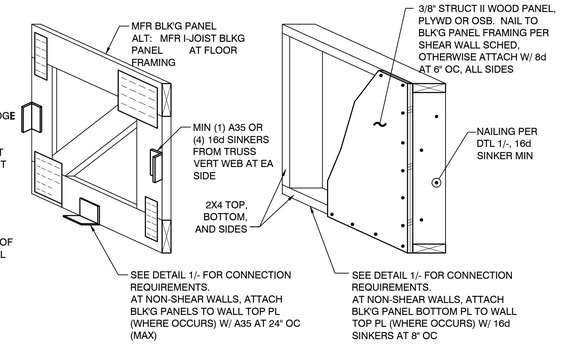

2 BLOCKING PANEL

NTS

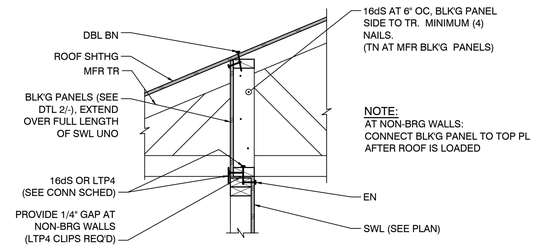

NOTE:
AT NON-BRG WALLS: CONNECT BLK'G PANEL TO TOP PL AFTER ROOF IS LOADED

TYPE A

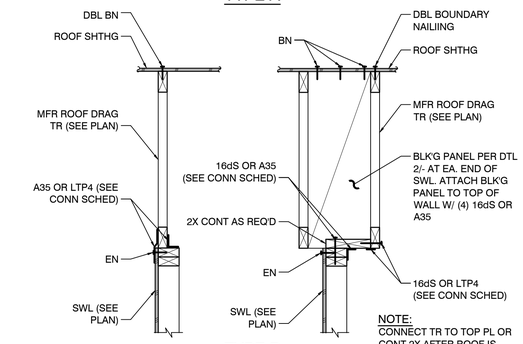

NOTE:
CONNECT TR TO TOP PL OR CONT 2X AFTER ROOF IS LOADED

TYPE B

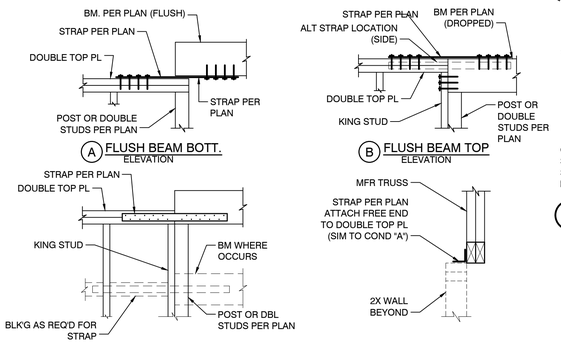

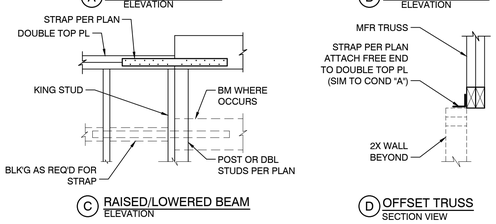

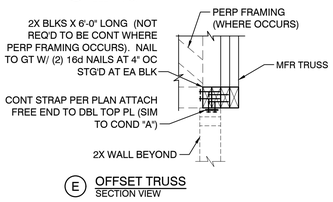

10 STRAP PLACEMENT

NTS

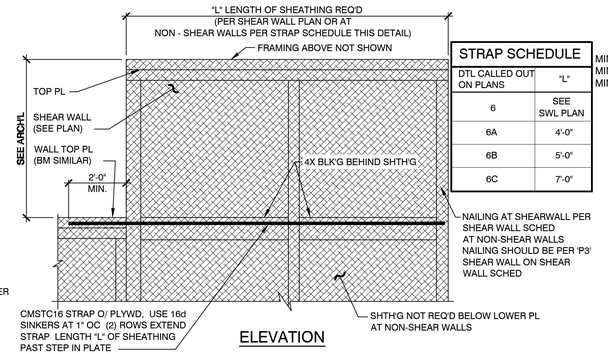

STRAP SCHEDULE	
DTL CALLED OUT ON PLANS	"L"
6	SEE SWL PLAN
6A	4'-0"
6B	5'-0"
6C	7'-0"

ELEVATION

6 6A 6B 6C PLATE STEP

NTS

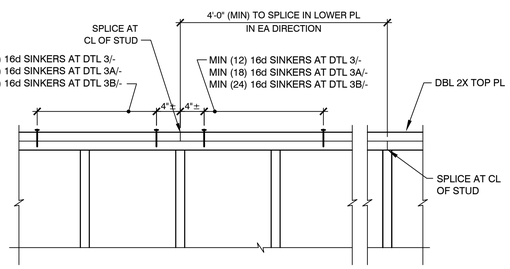

NOTE: TOP PL MEMBERS THAT ARE SPLICED LESS THAN 4'-0" OC SHALL BE CONNECTED W/ AN ST6224 STRAP

3 3A 3B TOP PLATE SPLICE

NTS

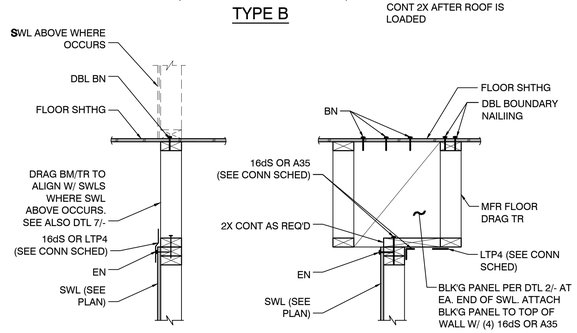

TYPE C

NOTE:
CONNECT TR TO TOP PL OR CONT 2X AFTER ROOF IS LOADED

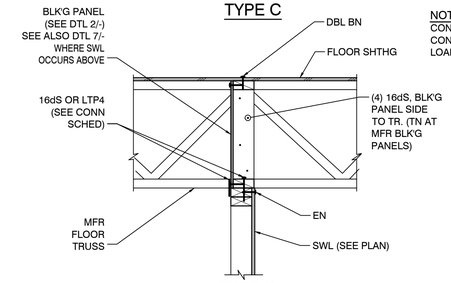

TYPE D

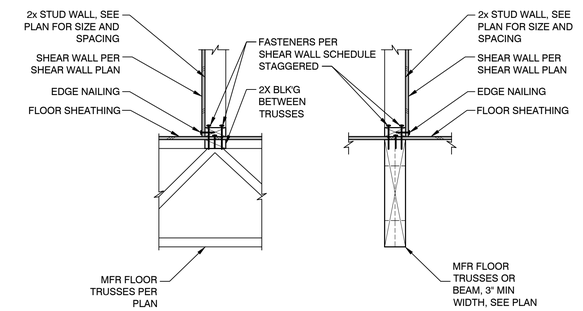

7 INT. S/W TO MFR FLOOR TRUSSES OR BEAM

NTS

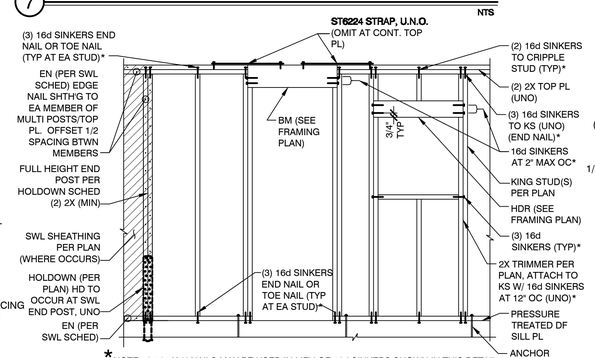

* NOTE: 0.131 X 3" NAILS MAY BE USED IN LIEU OF 16d SINKERS SHOWN IN THIS DETAIL

8 TYPICAL WALL FRAMING

NTS

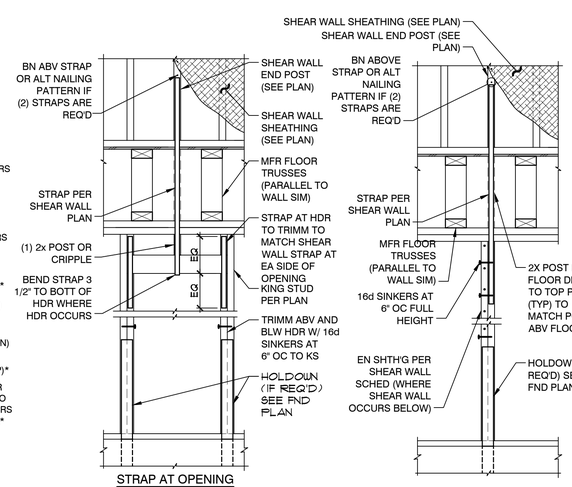

4 HOLD DOWN TRANSFER AT FLOOR

NTS

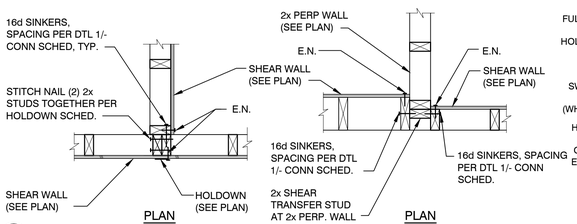

11

NTS

CONNECTION SCHEDULE		
	DFL / SPF	
SWL	A35 OR LTP4	16dS
NON-SWL	32" OC	8" OC
G1, G2, WSP ABW, PFG, PFH	32" OC	8" OC
P1	18" OC	5" OC
P2/P2a	12" OC	3" OC
P3	10" OC	2" OC (STG'D)
P4	8" OC	2" OC (STG'D)
P5	12" OC EA SIDE OF PL	SDS 1/4"X4 1/2" AT 4" OC

NOTE 1:
DBL-SIDED SWLS, USE 1/2 OF THE SPACING SHOWN ABOVE

1 SHEAR TRANSFER DTLS

NTS

JOB NO: 1939-005-201
DESIGNED BY: SLB
DRAWN BY: ACM

ISSUED FOR:
CONSTRUCTION DOCUMENTS
DATE: 06/09/20

SHEET TITLE:
STRUCTURAL DETAILS

REVISIONS:

L. R. NELSON CONSULTING ENGINEERS
CIVIL • FORENSICS • PLANNING • STRUCTURAL • SURVEY
6765 West Russell Rd. Suite 200
Las Vegas, Nevada 89118
(702) 798-7978
(702) 451-2296 FAX
www.lrneng.com

ASSURED REAL ESTATE
HENDERSON, NV
LOT 6

SD-2

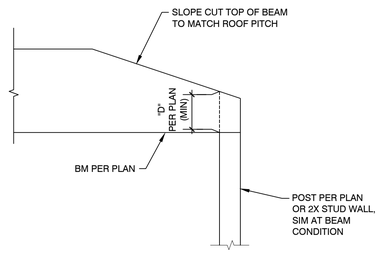

5 NTS

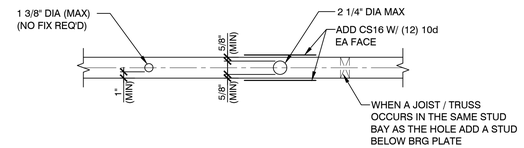

2X4 PLATE W/ DRILLED HOLES

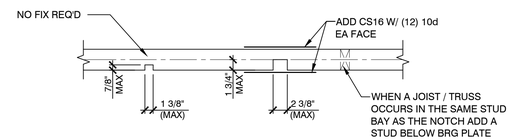

2X4 PLATE W/ NOTCHES

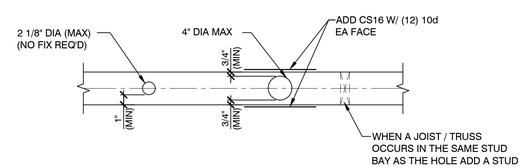

2X6 PLATE W/ DRILLED HOLES

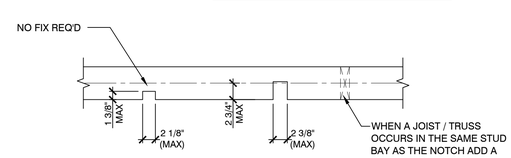

2X6 PLATE W/ NOTCHES

3 ALLOWABLE HOLES AND NOTCHES IN PLATES

INTERIOR WALLS (BEARING AND NON-BEARING) NTS

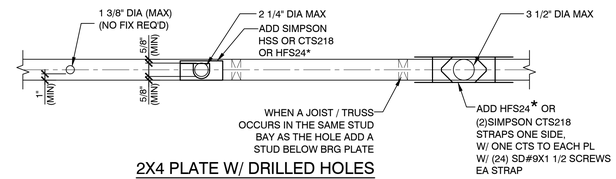

2X4 PLATE W/ DRILLED HOLES

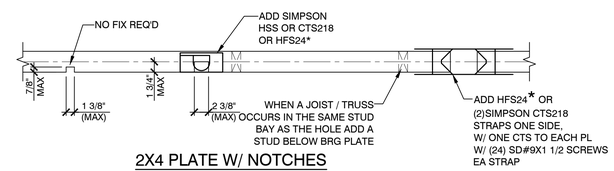

2X4 PLATE W/ NOTCHES

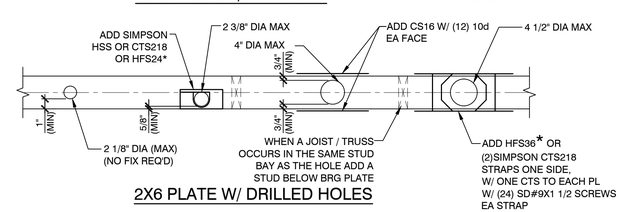

2X6 PLATE W/ DRILLED HOLES

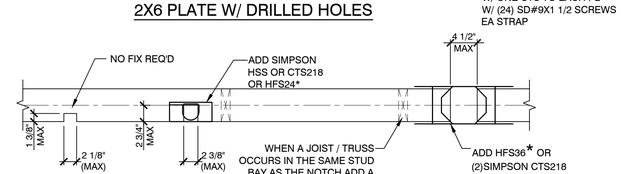

2X6 PLATE W/ NOTCHES

* HARDWARE MANUFACTURED BY HARDY
FRAMES SEE MFR PRODUCT CATALOG

1 ALLOWABLE HOLES AND NOTCHES IN PLATES

EXTERIOR WALLS AND INTERIOR SHEAR WALLS NTS

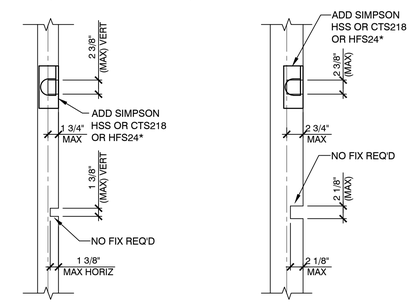

2X4 STUD W/ NOTCHES 2X6 STUD W/ NOTCHES

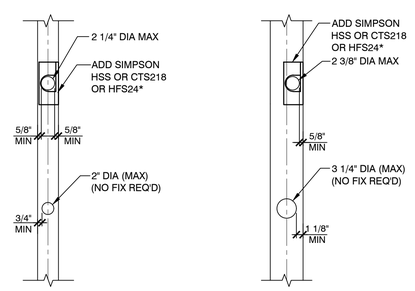

2X4 STUD W/ DRILLED HOLES 2X6 STUD W/ DRILLED HOLES

4 ALLOWABLE HOLES AND NOTCHES IN STUDS

INTERIOR NON-BEARING WALLS NTS

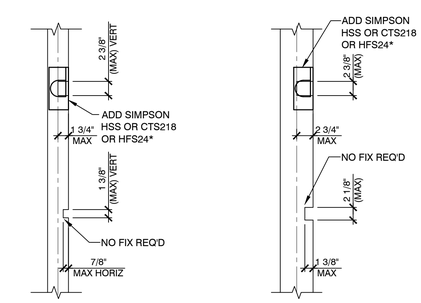

2X4 STUD W/ NOTCHES 2X6 STUD W/ NOTCHES

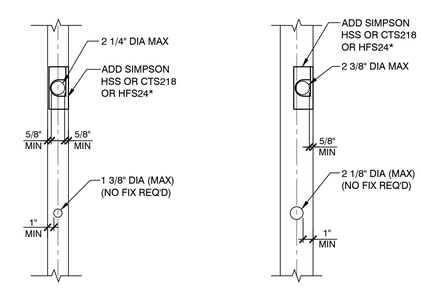

2X4 STUD W/ DRILLED HOLES 2X6 STUD W/ DRILLED HOLES

2 ALLOWABLE HOLES AND NOTCHES IN STUDS

EXTERIOR WALLS, INTERIOR SHEAR WALLS AND INTERIOR BEARING WALLS NTS

JOB NO: 1939-005-201
DESIGNED BY: SLB
DRAWN BY: ACM

ISSUED FOR:
CONSTRUCTION DOCUMENTS
DATE: 06/09/20

SHEET TITLE:
STRUCTURAL DETAILS

REVISIONS:

L. R. NELSON CONSULTING ENGINEERS
CIVIL • FORENSICS • PLANNING • STRUCTURAL • SURVEY
6765 West Russell Rd. Suite 200
Las Vegas, Nevada 89118
(702) 798-7978
(702) 451-2296 FAX
www.lrneng.com

ASSURED REAL ESTATE
HENDERSON, NV
LOT 6

SD-2.1

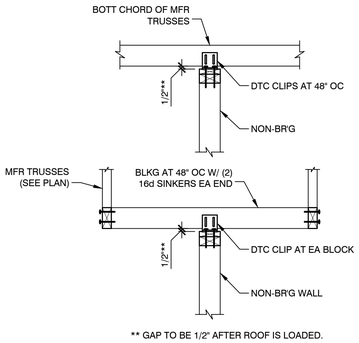

11 BRACING AT NON-BRG WALLS

NTS

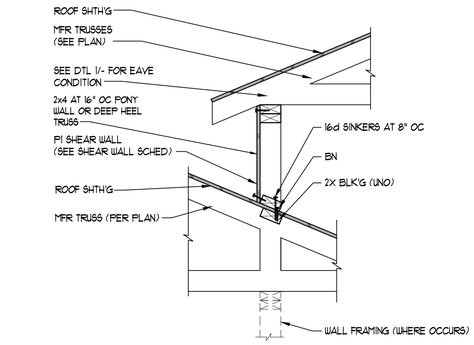

7 PONY WALL

NTS

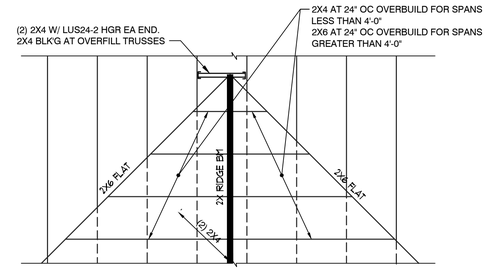

PLAN

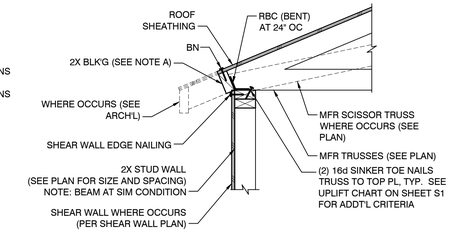

NOTES:
A. EVERY 4TH BLOCK MAY BE DELETED FOR EAVE VENT INSTALLATION
B. SEE DTL 4/- FOR HEEL DEPTH GREATER THAN 11 /14"
C. REFER TO ARCH'L DRAWINGS FOR HEEL HEIGHT

1 EAVE CONDITION

NTS

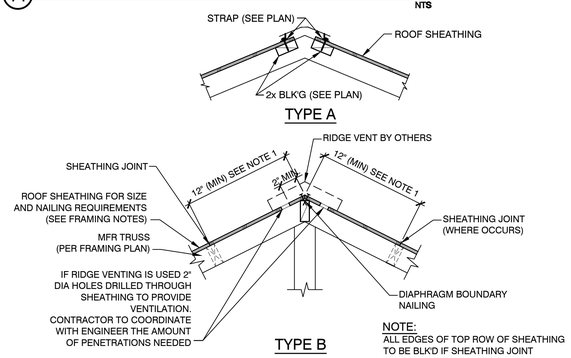

TYPE A

TYPE B

NOTE:
ALL EDGES OF TOP ROW OF SHEATHING TO BE BLK'D IF SHEATHING JOINT OCCURS WITHIN 2'-0" OF RIDGE

12 RIDGE BLOCKING

NTS

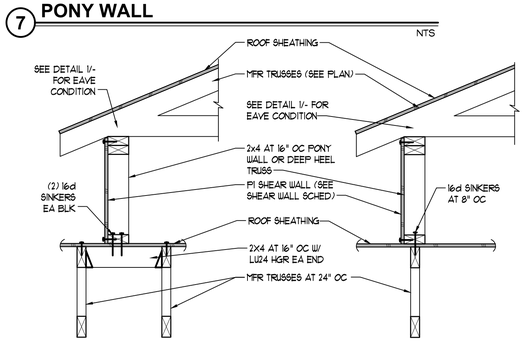

PONY WALL BETWEEN TRUSSES

PONY WALL O/ TRUSS

8 PONY WALL

NTS

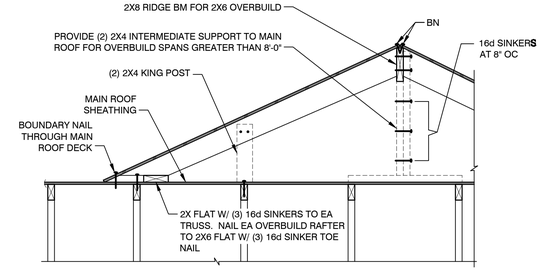

SECTION

4 OVERFILL FRAMING

NTS

GABLE END WALL LENGTH	(1) 2X4 PRIMARY BRACE SPACE AS FOLLOWS:
0' TO 12'-0"	(1) AT RIDGE
12'-1" TO 24'-0"	(1) AT RIDGE AND (1) AT 6' EA. SIDE OF RIDGE (TOTAL OF 3)
24'-1" AND GREATER	(1) AT RIDGE AND (1) AT 6' MAX OC EA SIDE THEREAFTER

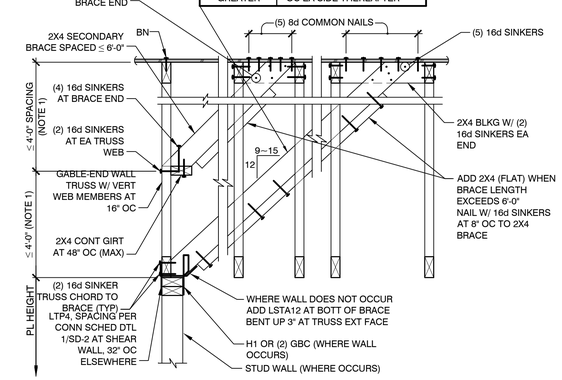

NOTE 1:
VERTICAL UNBRACED HEIGHT OF GABLE END WALL TRUSS MAY NOT EXCEED 4'-0".
ADD ADDITIONAL SECONDARY BRACES AS REQ'D TO MAINTAIN THE MAXIMUM UNBRACED HEIGHT.
EXCEPTION: WHERE TOTAL GABLE END WALL TRUSS HEIGHT IS LESS THAN 6'-0" THE SECONDARY BRACE MAY BE OMITTED
NOTE 2:
AT GABLE END WALL SCISSOR TRUSS WITH HEIGHT IS LESS THAN 6'-0", PROVIDE 3 BAYS OF BLOCKING PANELS, PER DETAIL 2/SD-2, AT 6'-0" OC SPACING IN LIEU OF 2X DIAGONAL BRACES.

2 GABLE END WALL TRUSS

NTS

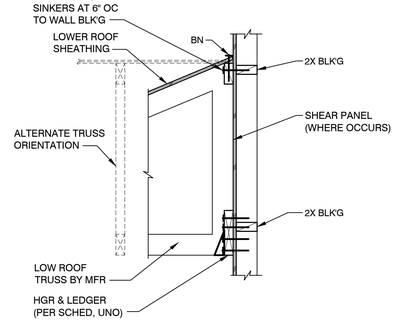

13 LOW ROOF TO WALL

NTS

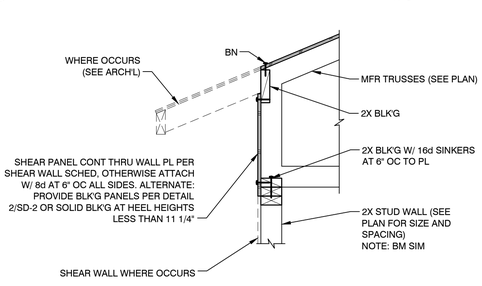

NOTES:
A. SEE DTL 1/- FOR HEEL DEPTH LESS THAN OR EQUAL TO 11 1/4"
B. REFER TO ARCH'L DRAWINGS FOR ACTUAL HEEL HEIGHT

9 TRUSS W/ DEEP HEEL AT BEARING

NTS

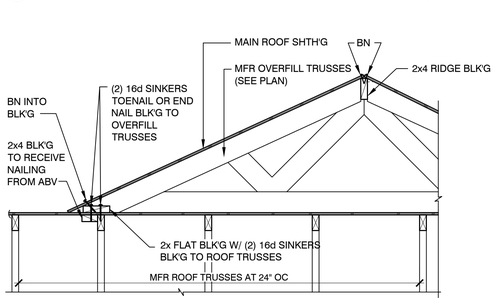

5 OVERFILL FRAMING

NTS

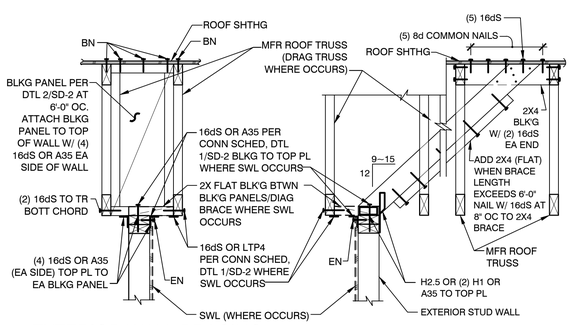

14 EXTERIOR WALL BRACING

NTS

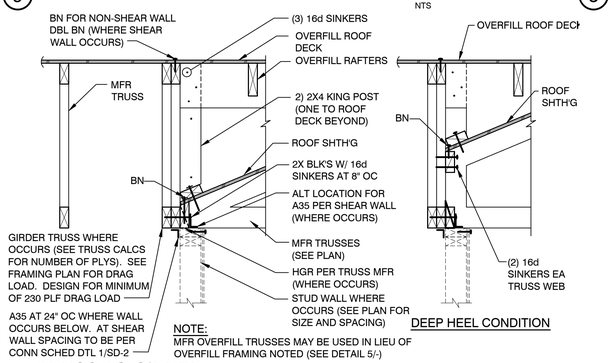

DEEP HEEL CONDITION

NOTE:
MFR OVERFILL TRUSSES MAY BE USED IN LIEU OF OVERFILL FRAMING NOTED (SEE DETAIL 5/-)

10 TRUSS TO GIRDER

NTS

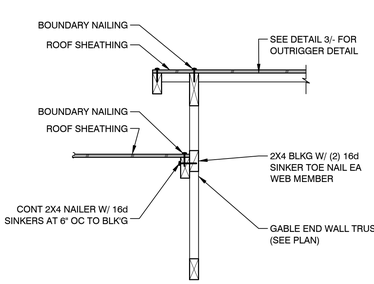

6 STEP IN ROOF

NTS

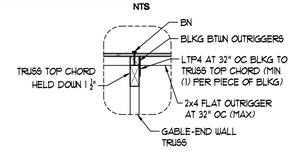

ALTERNATE CONNECTION

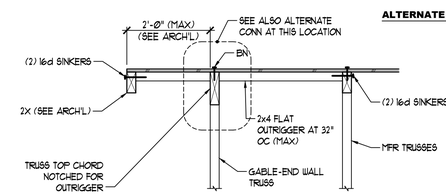

3 2X FLAT OUTRIGGER

NTS

JOB NO: 1939-005-201
DESIGNED BY: SLB
DRAWN BY: ACM

ISSUED FOR:
CONSTRUCTION DOCUMENTS
DATE: 06/09/20

SHEET TITLE:
STRUCTURAL DETAILS

REVISIONS:

L. R. NELSON CONSULTING ENGINEERS
CIVIL
FORENSICS
PLANNING
STRUCTURAL
SURVEY
6765 West Russell Rd. Suite 200
Las Vegas, Nevada 89118
(702) 798-7978
(702) 451-2296 FAX
www.lrneng.com

ASSURED REAL ESTATE
HENDERSON, NV
LOT 6

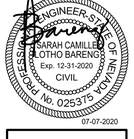

SD-3

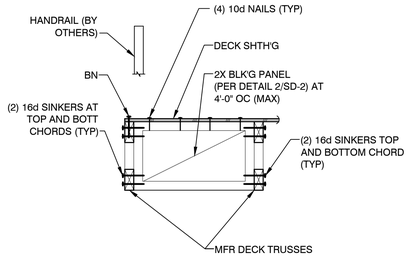

12

NTS

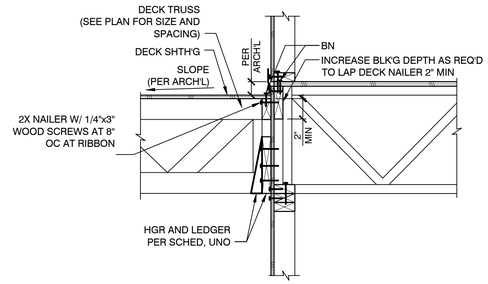

FOR INFORMATION NOT SHOWN SEE DTL 1/-

8 **DECK LEDGER**

NTS

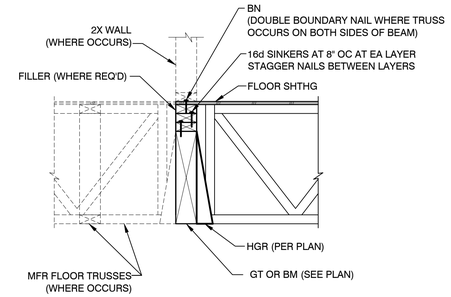

5 FLOOR TRUSS TO BEAM

NTS

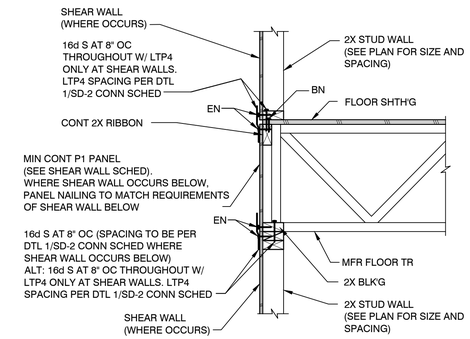

1 FLR TR PERP. TO EXT WALL

NTS

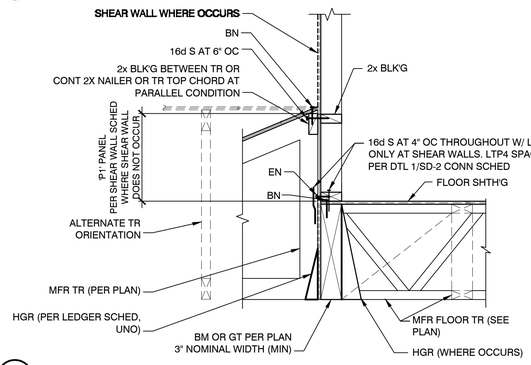

13

REFER TO DTLS 1/- OR 2/- FOR INFORMATION NOT SHOWN

NTS

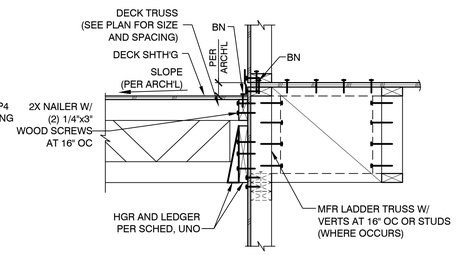

NOTE:
FOR INFO NOT SHOWN SEE DETAIL 2/-

9

NTS

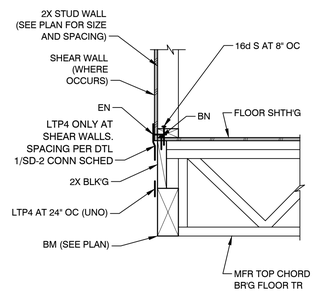

6 FLOOR TR TO BEAM

NTS

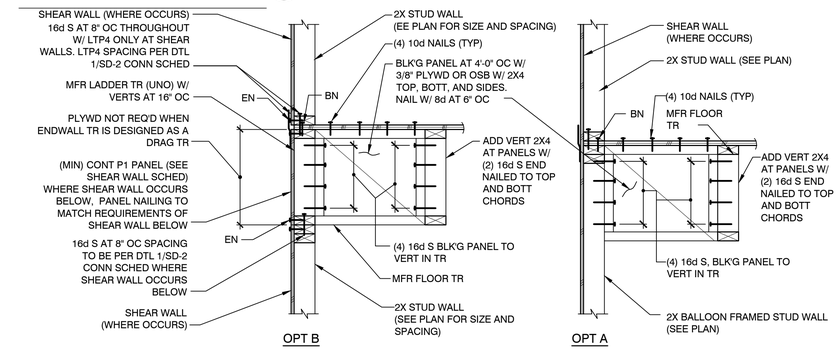

2 FLR TR PARALLEL TO EXT WALL

NTS

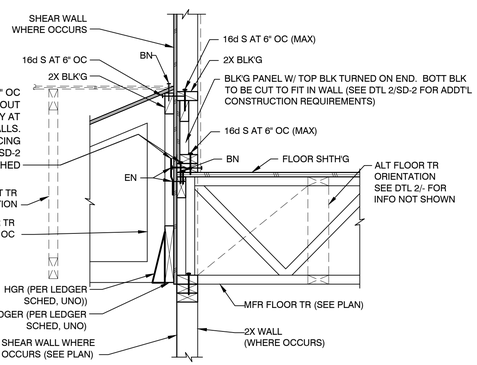

14

REFER TO DTLS 1/- OR 2/- FOR INFO NOT SHOWN

NTS

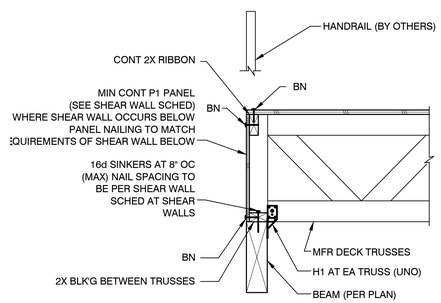

10

NTS

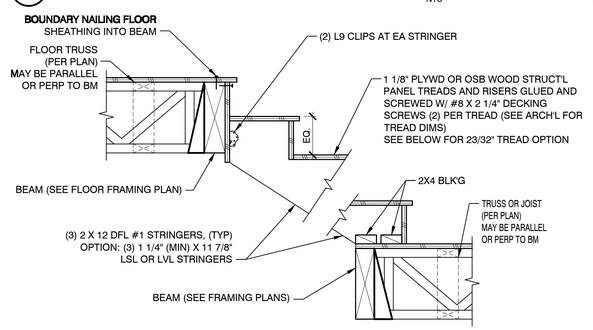

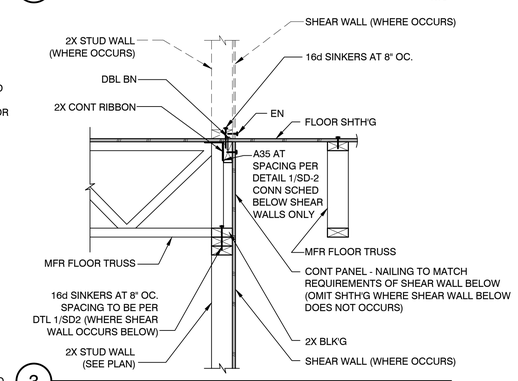

3

NTS

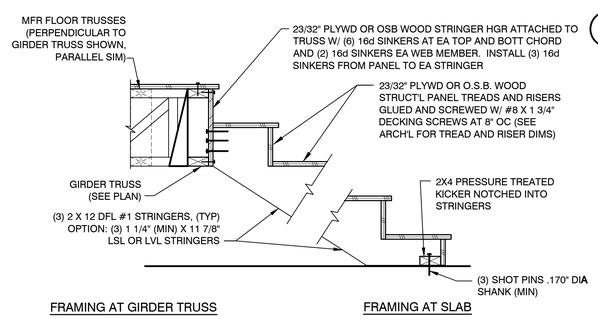

NOTE:
MAXIMUM SPAN FOR (3) 2x12 STRINGERS EQUAL 7'-0"
PROVIDE (4) STRINGERS FOR STAIR RUNS > 7'-0" AND < 14'-0" OR PROVIDE INTERMEDIATE SUPPORT

7 STAIR FRAMING

NTS

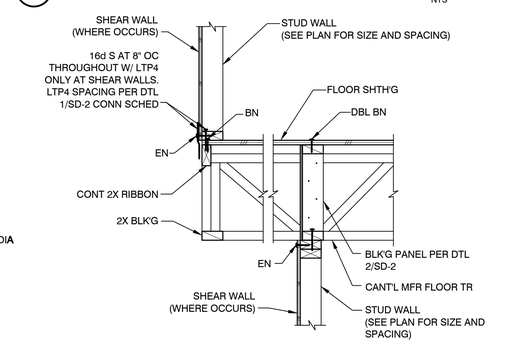

4 **CANTILEVERED FLOOR TR**

NTS

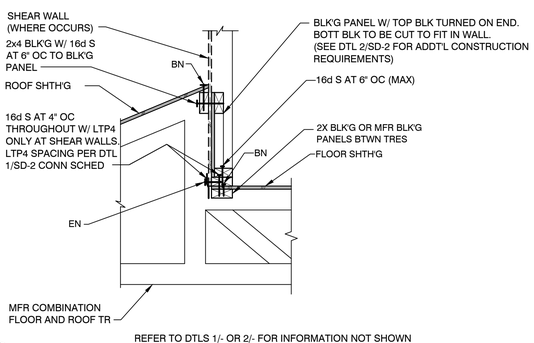

REFER TO DTLS 1/- OR 2/- FOR INFORMATION NOT SHOWN

15

NTS

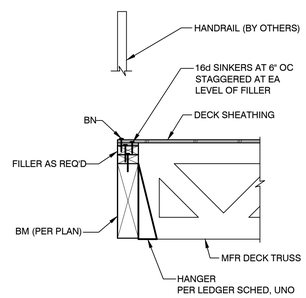

11

NTS

JOB NO: 1939-005-201
DESIGNED BY: SLB
DRAWN BY: ACM

ISSUED FOR:
CONSTRUCTION DOCUMENTS
DATE: 06/09/20

SHEET TITLE:
STRUCTURAL DETAILS

REVISIONS:

L. R. NELSON CONSULTING ENGINEERS
CIVIL • FORENSICS • PLANNING • STRUCTURAL • SURVEY
6765 West Russell Rd. Suite 200
Las Vegas, Nevada 89118
(702) 798-7978
(702) 451-2296 FAX
www.lrneng.com

ASSURED REAL ESTATE
HENDERSON, NV
LOT 6

PROFESSIONAL ENGINEER - STATE OF NEVADA
SARAH CAMILLE BLOTHO BARENGO
Exp. 12-31-2020
CIVIL
No. 025375
07-07-2020

SD-4